Electric Drives and Controls | Hydraulics | Linear Motion and Assembly Technologies | Pneumatics | Service

Rexroth
Bosch Group

Rexroth IndraDyn E Standard Motors MOT-FC for Frequency Converter Operation

R911343624
Edition 02

Project Planning Manual

Title Rexroth IndraDyn E
Standard Motors MOT-FC
for Frequency Converter Operation

Type of Documentation Project Planning Manual

Document Typecode DOK-MOTOR*-MOT-FC*****-PR02-EN-P

Internal File Reference RS-651ce7676d7238b00a6846a501b13630-2-en-US-4

Record of Revision

Edition	Release Date	Notes
DOK-MOTOR*-MOT-FC*****-PR01-EN-P	2014-07-04	1. Edition
DOK-MOTOR*-MOT-FC*****-PR02-EN-P	2014-08-12	2. Edition; Update of chapter 04 "Technical Data"

Note This document has been printed on chlorine-free bleached paper.

Table of Contents

Table of Contents

Page

Table of Contents

Page

Table of Contents

1 Introduction

1.1 Introduction to the Product

Standard asynchrounous motors of the IndraDyn E "MOT-FC“ product series are low voltage three-phase AC squirrel cage motors (standard motors). They are suited for frequency converter or direct mains operation in inductrial environment. These motors are used in variable-speed applications in Europe and Asia. An application within North America is not possible due to missing UL-authorization.

Motors of the IndraDyn E series are featured by

- comprehensive power spectrum
- high reliability and lifetime
- compact construction

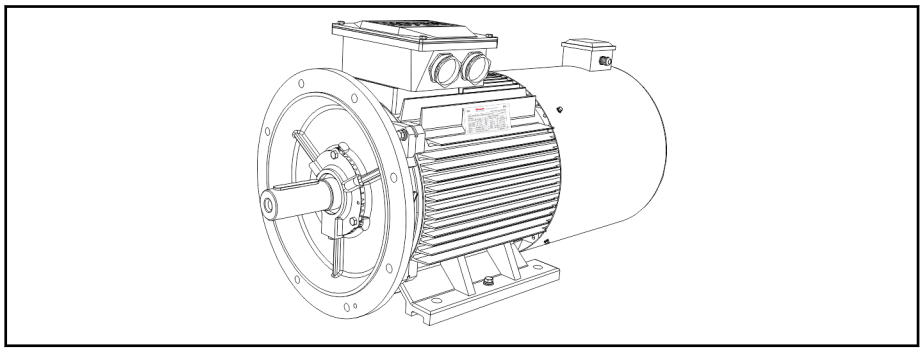

Fig. 1-1: Example of IndraDyn E MOT-FC motor (forced ventilated)

☞ According to the regulation (EG) No. 640/2009 of the commission from 22th July 2009 about proceeding the directive 2005/32/EG of the European Parliament and the Council regarding specification of the requirements on an environmentally design of electric motors, IE2 motors with a nominal output power of 7.5 - 375 kW from production date 2015-01-01 may only operated with a rotational speed control.

1.2 Power Spectrum

The power spectrum of MOT-FC motors realize a drive with the following typical basis data:

Mechanical design		IEC
Power range	kW	1,5 ... 315
Nominal voltage	V	230/400 V (< 3 kW) 400/690 V (> 3 kW)
Number of poles (nominal speed) at 1,500 min-1		4
Energy efficiency		IE2
frame shape		IM B35; IM B5, IM V1
Housing material		Aluminum (1.5 ... 7.5 kW) Gray iron (11 ... 315 kW)

Cooling Type		self ventilated (IC 411) forced ventilated (IC 416)
Permissible environmental temperature / setup elevation		-20 … +40 °C / 1,000 m
Motor / Winding protection		3 x PTC (1 piece per phase)
Position of terminal box		top

Tab. 1-1: MOT-FC power range with basis data

1.3 Additional Documentation

To plan the drive-systems with IndraDyn E motors, you may need additional documentation referring the used devices. Rexroth provides the complete product documentation in PDF format in the following Bosch Rexroth media directory:

http://www.boschrexroth.com/various/utilities/mediadirectory/index.jsp

1.4 Standards

This documentation refers to German, European and international technical standards. Documents and sheets on standards are subject to copyright protection and may not be passed on to third parties by Rexroth. If need be, please contact the authorized sales outlets or, in Germany, directly:

BEUTH Verlag GmbH

Burggrafenstrasse 6

10787 Berlin, Germany

Phone +49 (30) 2601 -2260

Fax +49 (30 2601 -1260

Internet: http://www.din.de/beuth

Email: postmaster@beuth.de

1.5 Additional Components

Documentation for external systems which are connected to Bosch Rexroth components are not included in the scope of delivery and must be ordered directly from the corresponding manufacturers.

1.6 Your Feedback

Your experiences are an essential part of the process of improving both the product and the documentation.

Please send your remarks to:

Bosch Rexroth AG

Dept. DC-IA/EDM3 (fs, mb)

Buergermeister-Dr.-Nebel-Strasse 2

97816 Lohr am Main, Germany

Email: dokusupport@boschrexroth.de

2 Safety Instructions

2.1 About this Chapter

Please observe the general safety instructions in this chapter and the safety-related guidelines and handling instructions in this manual. This will prevent personal hazards, material damage and errors.

☞ This manual must be stored by the user during the whole product lifetime and passed on when selling.

2.2 Appropriate Use

The motors are provided for installation in machines in commercial and industrial areas and are according to the standards EN / IEC 60034 (VDE 0530).

Prerequisites for appropriate and safe use of the motors are proper transport and storage, correct assembly and connection and careful maintenance and operation.

The machine manufacturer must evaluate the electric and mechanic safety as well as environmental influences in the assembled state of the machine according to the Machine Directive 2006/42/EC and DIN EN 60204-1 (safety of machines).

The electric installation must comply with the protection requirements of the EMC Directive 2004/108/EC. The proper installation is in the sole responsibility of the plant manufacturer. The converter manufacturer's EMC instructions must be observed.

The machine may not be commissioned before conformity with these directives has been determined.

2.3 Non-Intended Use

Any use of the motors outside of the specified fields of application or under operating conditions and technical data other than those specified in this documentation is considered to be "non-intended use" and is not allowed.

Any use of motors in hazardous areas (ATEX) is forbidden.

2.4 Personnel Qualification

For the purpose of this manual, means persons who are familiar with transporting, installing, mounting, commissioning and operating the components of the electrical drive and control system and the associated hazards and have an appropriate qualification for their job.

All persons working on, with or in the vicinity of an electrical system must be informed of the relevant safety requirements, safety guidelines and internal instructions (DIN EN 50110-1).

2.5 General Safety Instructions

Do not install or operate motors or components of the electric drive and control system before you have not carefully read and understand all delivered documents.

Please observe the particular applicable national, local and system-specific regulations, the in the documentation and the warning and informative labels on the motors.

Improper use of the motors and failure to follow the safety instructions in this document may result in material damage, personal injury, electric shock or, in extreme cases, to death!

For damage due to non-compliance with the safety instructions, Bosch Rexroth does not assume any liability.

2.6 Product and Technology-dependent Safety Instructions

2.6.1 Protection against Electrical Voltage

Work required on the electric system may only be carried out by skilled electricians. Tools for electricians (VDE tools) are absolutely necessary.

Prior to commencing the work:

1. Enable.
2. Protect the system or plant against being restarted
3. Ensure de-energization
4. Ground and short-circuit
5. Cover or shield any adjacent live parts

After completion of the work, unmake the measures in reverse order.

During motor operation, dangerous voltages occur! Danger! Risk of injury due to electric shock!

- Before switching on, establish the fixed connection of the protective conductor to all electric components according to the interconnection diagram.
- Operation, even for short-term measuring and testing purposes, is only permitted with the protective conductor securely connected to the component points provided.

2.6.2 Protection against Mechanical Hazards

Dangerous movements! Danger to life, risk of injury, severe personal injury or material damage!

- Do not stay within the area of motion of the machine. Prevent persons from accidently entering the danger zone.
- Make vertical axes safe against falling or declining after switching off the motor, e.g., by
  - locking the vertical axis mechanically
  - providing an external braking / catching / clamping device, or
  - ensure sufficient equilibration of the vertical axes.

2.6.3 Protection against Magnetic and Electromagnetic Fields

Magnetic and electromagnetic fields are created in the direct environment of live conductors or permanent magnets of electric motors and can be a great danger for persons. The machine operator must sufficiently protect the personal working in these areas from potential occurring damage due to suitable measures (e.g. warning notes, protective clothes, designation of the danger zone).

Please note the valid country-specific regulations. Regarding "electromagnetic fields" observe the guidelines of the occupational insurance association in the BGV B11 and BGR B11 in Germany.

2.6.4 Protection against Burns

Risk of burns by hot surfaces!

- Avoid contact with hot motor surfaces. **Temperatures may rise to over 70°C**.
- Allow the motor components to cool down long enough before touching them.
- Temperature-sensitive components may not come into contact with the motor surface. Ensure appropriate mounting distance of connection cables and other components.

2.6.5 Electrostatic Sensitive Devices (ESD)

Rexroth motors contain parts which underlie an electrostatic danger. These components, especially temperature sensors of the motor winding can be destroyed by improper use.

For example, avoid direct contact to open wires of the connection cable of the temperature sensor without electrostatic discharge or grounding before.

☞ Do suitable EDSD protective measures before you handle imperiled components (e.g. EDSD protective clothes, wristlets, conductive floor, grounded cabinets and working surfaces).

3 Type Code IndraDyn E

3.1 General Information

The type code describes the deliverable motor variants. It is the basis for selecting and ordering products from Bosch Rexroth. This applies to new products as well as to spare parts and repairs..

Under chapter 3.3 "Type Code Structure" on page 12, a motor type code with all provided options is available. The following description gives an overview over the separate columns of the type code (”abbrev. column”) and its meaning.

3.2 Identification

MOT-FC motors have an individual type plate showing the device designation and providing technical information. The type plate is fixed lateral on the motor housing and serves to identify the motor and for spare parts purchasing in the case of malfunction.

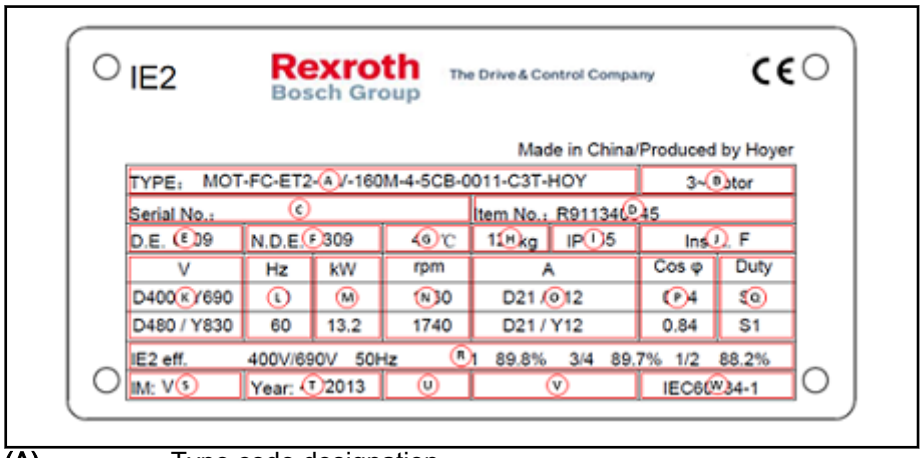

(A) Type code designation
(B) Type of construction of motor
(C) Serial number
(D) Part number
(E) Bearing size (drive end)
(F) Bearing size (non-drive end)
(G) Maximum permitted ambient temperature
(H) Mass
(I) Degree of protection
(J) Insulation class
(K) Rated voltage
(L) Rated frequency
(M) Rated power
(N) Rated speed
(O) Rated current
(P) Performance factor
(Q) Operating mode
(R) Energy efficiency class & efficiency
(S) Frame shape
(T) Year of manufacture
(U) Extra equipment
(V) (blanc)
(W) Manufacturing standard

Fig. 3-1: Type plate MOT-FC

Type Code IndraDyn E

3.3 Type Code Structure

SAP material shorttext	1	2	3	4	5	6	7	8	9	10	11	12	13	14	15	16	17	18	19	20	21	22	23	24	25	26	27	28	29	30	31	32	33	34	35	36	37	38	39	40
Example:	M	O	T	-	F	C	-	E	T	2	-	*	B	V	-	*	9	0	L	-	4	-	5	C	A	-	0	1	,	5	-	A	3	T	-	H	O	Y		

Object
Low voltage three-pase AC
squirrel cage motor for für FU-operation
. . . . . .= MOT-FC

Mechanical Design
acc. to IEC/EN. . . . . .= E

Cooling Mode (acc. to IEC 60034-6)
IC411[a)] . . . . . .= T
IC416[b)] . . . . . = V

Winding level class (acc. to IEC 60034-30)
IE 2: High efficiency . . . . . = 2

Design[c)] (acc. to IEC 60034-7)
e.g. IM V1. . . . . = *BV

Frame Size
e.g. 90L . . . . . = *90L

Number of Poles (Speed)
4-pole (1,500 min^{-1} at 50 Hz; 1,800 min^{-1} at 60 Hz). . . . . .= 4

Rated Frequency
50 Hz . . . . . = 5

Rated Voltage (Standard voltage acc. to IEC 60038)
230/400 V - 50 Hz. . . . . .= CA
400/690 V - 50 Hz. . . . . .= CB

Rated Power
z. B. 1,5 kW . . . . . = 01,5

Housing Material
Aluminum (1.5 kW -7.5 kW) . . . . . = A
Gray iron (from 11 kW) . . . . . = C

Motor Protection
Motor protection by PTCs with 3 installed temperature sensors for switch-off . . . . . = 3

Terminal Box: Position
T: top (12 o`clock). . . . . = T

Manufacturer
Hoyer Motors . . . . . = HOY

ZN-10601-002_NOR_N_DE_2014-06-24.des

a) Self-surface cooling
b) Foreign-surface cooling
c) For further technical specifications see tab. 3-1 "Type of construction acc. to IEC 60034-7" on page 13

Fig. 3-2: Structure type code IndraDyn E

Type Code IndraDyn E

Explanations about shorttext - constructions acc. to IEC 60034-7

Designa-tion	Description	Rated power	Mounting direction	Abbrevia-tion
IM B5 IM V1	Horizontal or vertical shaft; without feet; Flange attachment on the drive side of the flange; Flange bearing shield on drive side, with access from housing side drive side below or vertically.	1,5 ... 200 kW	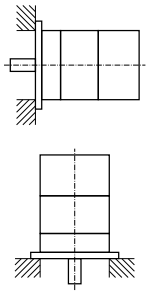	*BV
IM B5	Horizontal shaft; without feet; Flange attachment on the drive side of the flange; Flange bearing shield on drive side, with access from housing side	250 ... 315 kW	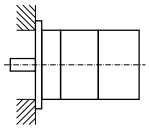	*B5
IM V1	Vertical shaft; without feet; Flange attachment on the drive side of the flange, drive side facing down	250 ... 315 kW	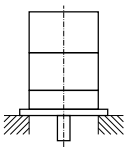	*V1
IM B35	Horizontal shaft; Foot installation with additional flange mounting on drive side of the flange	11 ... 315 kW	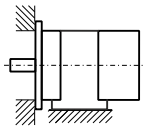	B35

Tab. 3-1: Type of construction acc. to IEC 60034-7

Type Code IndraDyn E

3.4 Availability

3.4.1 Self Ventilated Motor Variants

	Self ventilation (IC411)	
	Installation mode flange, without foot (*BV, *V1, *B5)	Installation mode flange, with foot (B35)
1.5 kW	MOT-FC-ET2-*BV-*90L-4-5CA-01.5-A3T-HOY R911340639	- / -
2.2 kW	MOT-FC-ET2-*BV-100L-4-5CA-02,2-A3T-HOY R911340640	- / -
3 kW	MOT-FC-ET2-*BV-100L-4-5CA-0003-A3T-HOY R911340641	- / -
4 kW	MOT-FC-ET2-*BV-112M-4-5CB-0004-A3T-HOY R911340642	- / -
5.5 kW	MOT-FC-ET2-*BV-132S-4-5CB-05,5-A3T-HOY R911340643	- / -
7.5 kW	MOT-FC-ET2-*BV-132M-4-5CB-07,5-A3T-HOY R911340644	- / -
11 kW	MOT-FC-ET2-*BV-160M-4-5CB-0011-C3T-HOY R911340645	MOT-FC-ET2-B35-160M-4-5CB-0011-C3T-HOY R911340646
15 kW	MOT-FC-ET2-*BV-160L-4-5CB-0015-C3T-HOY R911340647	MOT-FC-ET2-B35-160L-4-5CB-0015-C3T-HOY R911340648
18.5 kW	MOT-FC-ET2-*BV-180M-4-5CB-18,5-C3T-HOY R911343445	MOT-FC-ET2-B35-180M-4-5CB-18,5-C3T-HOY R911340649
22 kW	MOT-FC-ET2-*BV-180L-4-5CB-0022-C3T-HOY R911343447	MOT-FC-ET2-B35-180L-4-5CB-0022-C3T-HOY R911340650
30 kW	MOT-FC-ET2-*BV-200L-4-5CB-0030-C3T-HOY R911343448	MOT-FC-ET2-B35-200L-4-5CB-0030-C3T-HOY R911340651
37 kW	MOT-FC-ET2-*BV-225S-4-5CB-0037-C3T-HOY R911343449	MOT-FC-ET2-B35-225S-4-5CB-0037-C3T-HOY R911340652
45 kW	MOT-FC-ET2-*BV-225M-4-5CB-0045-C3T-HOY R911343450	MOT-FC-ET2-B35-225M-4-5CB-0045-C3T-HOY R911340653
55 kW	MOT-FC-ET2-*BV-250M-4-5CB-0055-C3T-HOY R911341622	MOT-FC-ET2-B35-250M-4-5CB-0055-C3T-HOY R911340654
75 kW	MOT-FC-ET2-*BV-280S-4-5CB-0075-C3T-HOY R911343451	MOT-FC-ET2-B35-280S-4-5CB-0075-C3T-HOY R911340655
90 kW	MOT-FC-ET2-*BV-280M-4-5CB-0090-C3T-HOY R911343452	MOT-FC-ET2-B35-280M-4-5CB-0090-C3T-HOY R911340656
110 kW	MOT-FC-ET2-*BV-315S-4-5CB-0110-C3T-HOY R911343453	MOT-FC-ET2-B35-315S-4-5CB-0110-C3T-HOY R911343459

	Self ventilation (IC411)	
	Installation mode flange, without foot (*BV, *V1, *B5)	Installation mode flange, with foot (B35)
132 kW	MOT-FC-ET2-*BV-315M-4-5CB-0132-C3T-HOY R911343454	MOT-FC-ET2-B35-315M-4-5CB-0132-C3T-HOY R911343460
160 kW	MOT-FC-ET2-*BV-315L-4-5CB-0160-C3T-HOY R911343455	MOT-FC-ET2-B35-315L-4-5CB-0160-C3T-HOY R911343461
200 kW	MOT-FC-ET2-*BV-315L-4-5CB-0200-C3T-HOY R911343456	MOT-FC-ET2-B35-315L-4-5CB-0200-C3T-HOY R911343462
250 kW	MOT-FC-ET2-*V1-355M-4-5CB-0250-C3T-HOY R911343457	MOT-FC-ET2-B35-355M-4-5CB-0250-C3T-HOY R911343463
315 kW	MOT-FC-ET2-*V1-355L-4-5CB-0315-C3T-HOY R911343458	MOT-FC-ET2-B35-355L-4-5CB-0315-C3T-HOY R911343464

Tab. 3-2: Overview about self ventilated motor variants

3.4.2 Forced Ventilated Motor Variants

	Forced ventilated (IC416)	
	Installation mode flange, without foot (*BV, *V1, *B5)	Installation mode flange, with foot (B35)
1.5 kW	MOT-FC-EV2-*BV-*90L-4-5CA-01,5-A3T-HOY R911341157	- / -
2.2 kW	MOT-FC-EV2-*BV-100L-4-5CA-02,2-A3T-HOY R911341158	- / -
3 kW	MOT-FC-EV2-*BV-100L-4-5CA-0003-A3T-HOY R911341159	- / -
4 kW	MOT-FC-EV2-*BV-112M-4-5CB-0004-A3T-HOY R911341160	- / -
5.5 kW	MOT-FC-EV2-*BV-132S-4-5CB-05,5-A3T-HOY R911341161	- / -
7.5 kW	MOT-FC-EV2-*BV-132M-4-5CB-07,5-A3T-HOY R911341162	- / -
11 kW	MOT-FC-EV2-*BV-160M-4-5CB-0011-C3T-HOY R911341163	MOT-FC-EV2-B35-160M-4-5CB-0011-C3T-HOY R911341164
15 kW	MOT-FC-EV2-*BV-160L-4-5CB-0015-C3T-HOY R911341165	MOT-FC-EV2-B35-160L-4-5CB-0015-C3T-HOY R911341166
18.5 kW	MOT-FC-EV2-*BV-180M-4-5CB-18,5-C3T-HOY R911343524	MOT-FC-EV2-B35-180M-4-5CB-18,5-C3T-HOY R911341167
22 kW	MOT-FC-EV2-*BV-180L-4-5CB-0022-C3T-HOY R911343525	MOT-FC-EV2-B35-180L-4-5CB-0022-C3T-HOY R911341168
30 kW	MOT-FC-EV2-*BV-200L-4-5CB-0030-C3T-HOY R911343527	MOT-FC-EV2-B35-200L-4-5CB-0030-C3T-HOY R911341169

Type Code IndraDyn E

	Forced ventilated (IC416)	
	Installation mode flange, without foot (*BV, *V1, *B5)	Installation mode flange, with foot (B35)
37 kW	MOT-FC-EV2-*BV-225S-4-5CB-0037-C3T-HOY R911343529	MOT-FC-EV2-B35-225S-4-5CB-0037-C3T-HOY R911341170
45 kW	MOT-FC-EV2-*BV-225M-4-5CB-0045-C3T-HOY R911343530	MOT-FC-EV2-B35-225M-4-5CB-0045-C3T-HOY R911341171
55 kW	MOT-FC-EV2-*BV-250M-4-5CB-0055-C3T-HOY R911341532	MOT-FC-EV2-B35-250M-4-5CB-0055-C3T-HOY R911341172
75 kW	MOT-FC-EV2-*BV-280S-4-5CB-0075-C3T-HOY R911343533	MOT-FC-EV2-B35-280S-4-5CB-0075-C3T-HOY R911341173
90 kW	MOT-FC-EV2-*BV-280M-4-5CB-0090-C3T-HOY R911343534	MOT-FC-EV2-B35-280M-4-5CB-0090-C3T-HOY R911341174
110 kW	MOT-FC-EV2-*BV-315S-4-5CB-0110-C3T-HOY R911343535	MOT-FC-EV2-B35-315S-4-5CB-0110-C3T-HOY R911343537
132 kW	MOT-FC-EV2-*BV-315M-4-5CB-0132-C3T-HOY R911343539	MOT-FC-EV2-B35-315M-4-5CB-0132-C3T-HOY R911343541
160 kW	MOT-FC-EV2-*BV-315L-4-5CB-0160-C3T-HOY R911343542	MOT-FC-EV2-B35-315L-4-5CB-0160-C3T-HOY R911343543
200 kW	MOT-FC-EV2-*BV-315L-4-5CB-0200-C3T-HOY R911343544	MOT-FC-EV2-B35-315L-4-5CB-0200-C3T-HOY R911343546
250 kW	MOT-FC-EV2-*V1-355M-4-5CB-0250-C3T-HOY R911343547	MOT-FC-EV2-B35-355M-4-5CB-0250-C3T-HOY R911343548
315 kW	MOT-FC-EV2-*V1-355L-4-5CB-0315-C3T-HOY R911343549	MOT-FC-EV2-B35-355L-4-5CB-0315-C3T-HOY R911343550

Tab. 3-3: Overview about available forced ventilated motor variants

4 Technical Data

4.1 Basics

4.1.1 Operation Mode

The motors are documented according to test criteria and measuring methods of EN 60034-1. The specified characteristic curves correspond with the operation mode S1.

4.1.2 Overview about Parameters

Designation	Symbol	Unit	Definition
Electrical parameters			
Rated power	P_N	kW	Rated power in nominal working point
Rated torque	M_N	Nm	Rated torque in nominal working point
Rated current	I_N	A	Rated current of the motor to reach M_N
Rated frequency	f_N	Hz	Frequency of rated voltage to make rated power P_N available.
Rated voltage	U_N	V	Rated voltage of motor in rated point
Winding interconnection	-	-	Y = star connection D = delta connection
Rated speed	n_N	min^{-1}	Rated speed of motor in nominal working point
Performance factor	cos φ	-	Rate among effective power P and apparent power S
Efficiency at x %-load	η	%	Load-dependend efficiency of the motor
Maximum torque	M_{max}	Nm	For maximum current I_{max} exchangeable maximum torque
Maximum current	I_{max}	A	Maximum current of the motor at load with maximum torque M_{max}
Maximum velocity	n_{max}	min^{-1}	Maximum permissible velocity of the motor.
Mechanical parameters			
Number of pole pairs	o	-	Number of pole pairs of the motor
Bearing A-side	-	-	Bearing type A-side
Bearing B-side	-	-	Bearing type B-side
Moment of inertia	J_{rot}	$kg*m^2$	Moment of inertia of motor
Mass	m	kg	Motor mass
Sound pressure level	L_P	dB[A]	Value of sound emission
Cable gland on terminal box	-	mm	Diameter of cable gland at terminal box
Terminal board bolts	-	mm	Thread size of connection bolt on terminal board within terminal box
Ø-clamping range of connection clamps	-	mm	Permitted clamping range on terminal board

Tab. 4-1: Definition of Parameters

4.2 Motor Characteristic Curves (Example)

The following sample characteristic show the operating behavior of the motors exemplarily. Further values of a motor characteric curve which are not specified in the data sheet can be figured and selected with other means.

☞ For layout and generation of detailed characteristic curves of motor and controller combinations, Bosch Rexroth provides the following means:

- **Rexroth SytronixSize**

  A layout program for all Rexroth Sytronix and IndraDyn components, which makes optimum layout of the new intelligent Rexorth drive generation easier.

  SytronixSize combines the layout of all usual drive mechanisms with a description of branch-specific technology functions and typical types of applications.

  Free program under:

  www.boschrexroth.com/sytronixsize

- **Rexroth IndraSize**

  A layout program for all Rexroth Sytronix and IndraDyn components, which makes optimum layout of the new intelligent Rexorth drive generation easier.

  IndraSize combines the layout of all usual drive mechanisms with a description of branch-specific technology functions and typical types of applications.

  Free program under:

  www.boschrexroth.com/indrasize

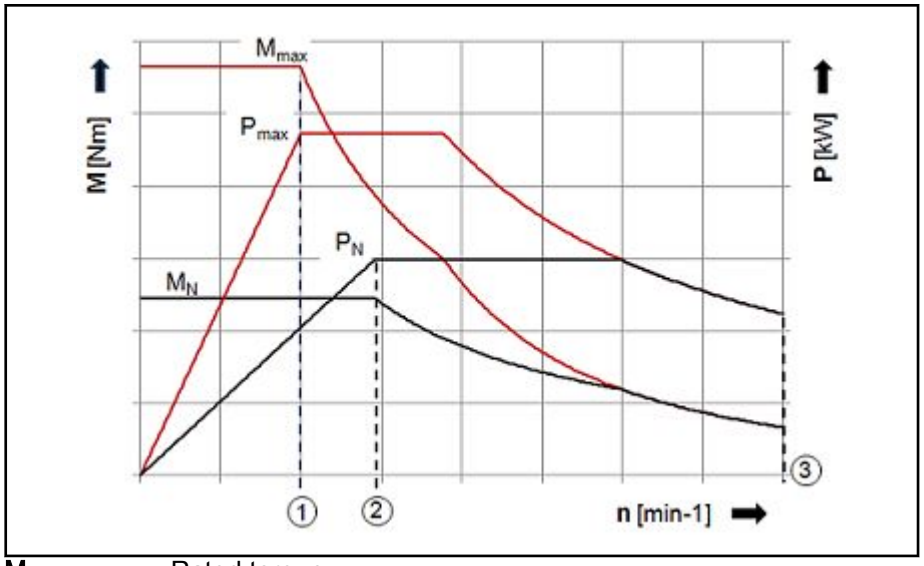

M_N	Rated torque
M_{max}	Maximum torque
P_N	Rated power
P_{max}	Maximum power
①	Maximum velocity at maximum torque
②	Rated speed
③	Maximum velocity

Fig. 4-1: Sample curve

☞ The achievable torque depends on the drive controller used. The reference value for the motor characteristic curves is an unregulated DC bus voltage of 540 V_{DC}.

4.3 General Technical Data

The following table contains technical data which are valid for all motor frame sizes. In this context, however, the comments on the individual items in Chapter "Application Notes" must be observed.

Designation	Symbol	Unit	MOT-FC-ET2-...
Maximum allowed DC bus voltage	U_{DC}, max	V	760
Ambient temperature in operation (see also tab. 6-2 "Operating conditions" on page 88)	T_{amb}	°C	-20 ... +40
Allowed transport temperature (see also chapter 7.2.2 "Transport Instructions" on page 98)	T_T	°C	-20 ... +80
Allowed storage temperature (see also chapter 7.2.3 "Storage Instructions" on page 99)	T_L	°C	-20 ... +60
Temperature class according to DIN EN 60034-1	T.CL.	-	155 (F)
Shutdown temperature (winding) (see also chapter 6.9 "Motor Temperature Monitoring" on page 93)	T_{shut}	°C	155

Tab. 4-2: General Technical Data

4.4 Technical Data Frame Size 90L / 1.5 kW

4.4.1 Data Sheet

Designation	Symbol	Unit	MOT-FC 90L / 1.5 kW
Rated power	P_N	kW	1.50
Rated torque	M_N	Nm	10.0
Rated current	I_N	A	3.4
Rated frequency	f_N	Hz	50.0
Rated voltage	U_N	V	400
Winding interconnection	-	-	Y
Rated speed	n_N	min^{-1}	1,440
Performance factor	cosφ	-	0.71
Efficiency at 100%-load	η_{100}	-	0.84
Efficiency at 75%-load	η_{75}	-	0.84
Efficiency at 50%-load	η_{50}	-	0.83
Maximum torque	M_{max}	Nm	23.0
Maximum current	I_{max}	A	8.5
Maximum velocity	n_{max}	min^{-1}	4,200
Mechanical parameters			
Number of pole pairs	o	-	2
Bearing A-side	-	-	6205-ZZ/C3
Bearing B-side	-	-	6205-ZZ/C3
Moment of inertia of the rotor	J_{rot}	kg * m²	0.0031000
Mass	m_{mot}	kg	18.0
Sound pressure level	L_P	dB[A]	60
Cable gland at terminal box	-	mm	M20 x 1.5
Terminal board bolts	-	mm	M4
Ø-clamping range of connection clamps	-	mm	8 ... 13
			Latest amendment: 2014-06-30

Tab. 4-3: Technical Data Frame Size 90L / 1.5 kW

4.4.2 Frame Size 90L / 1.5 kW Specifications

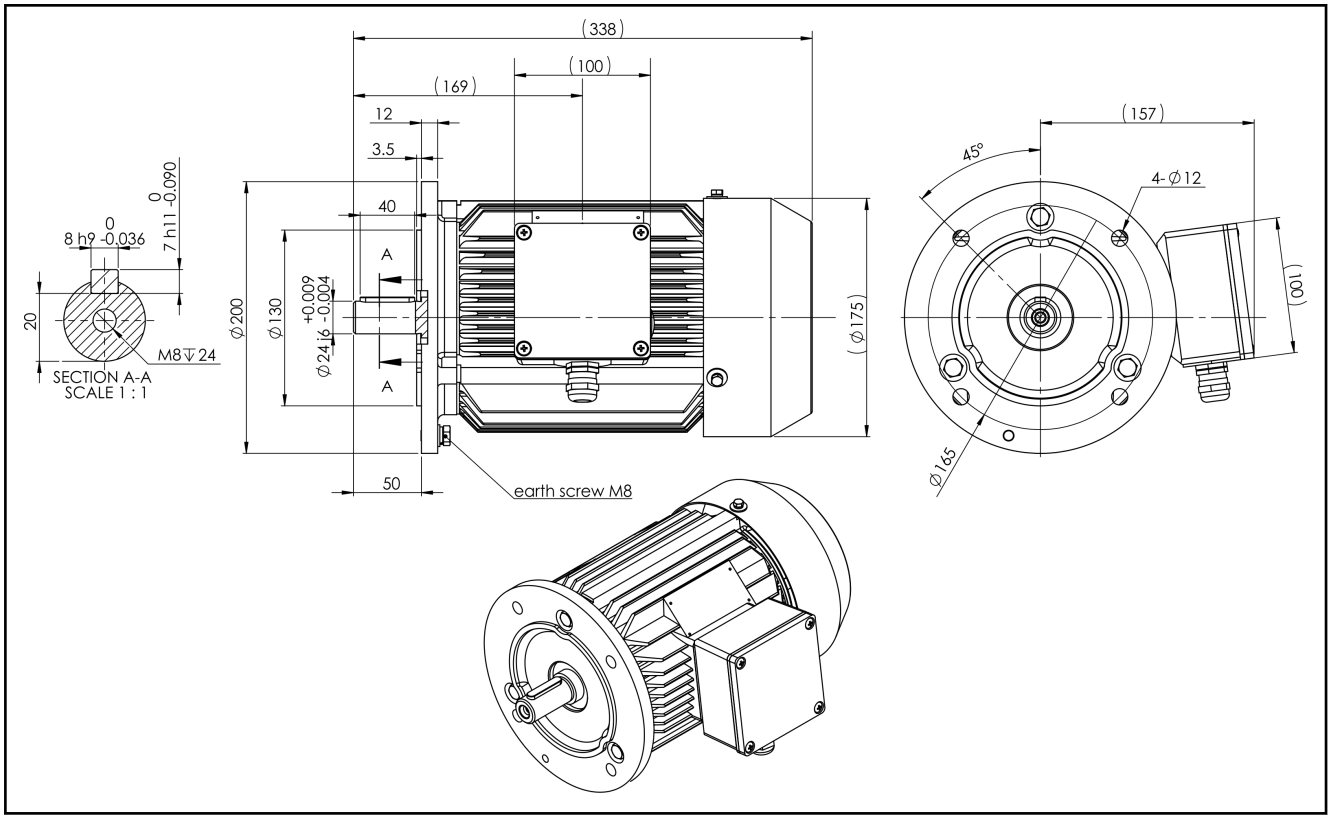

*Fig. 4-2: Specifications MOT-FC-ET2-*BV-*90L-4-5CA-**01.5**-A3T-HOY*

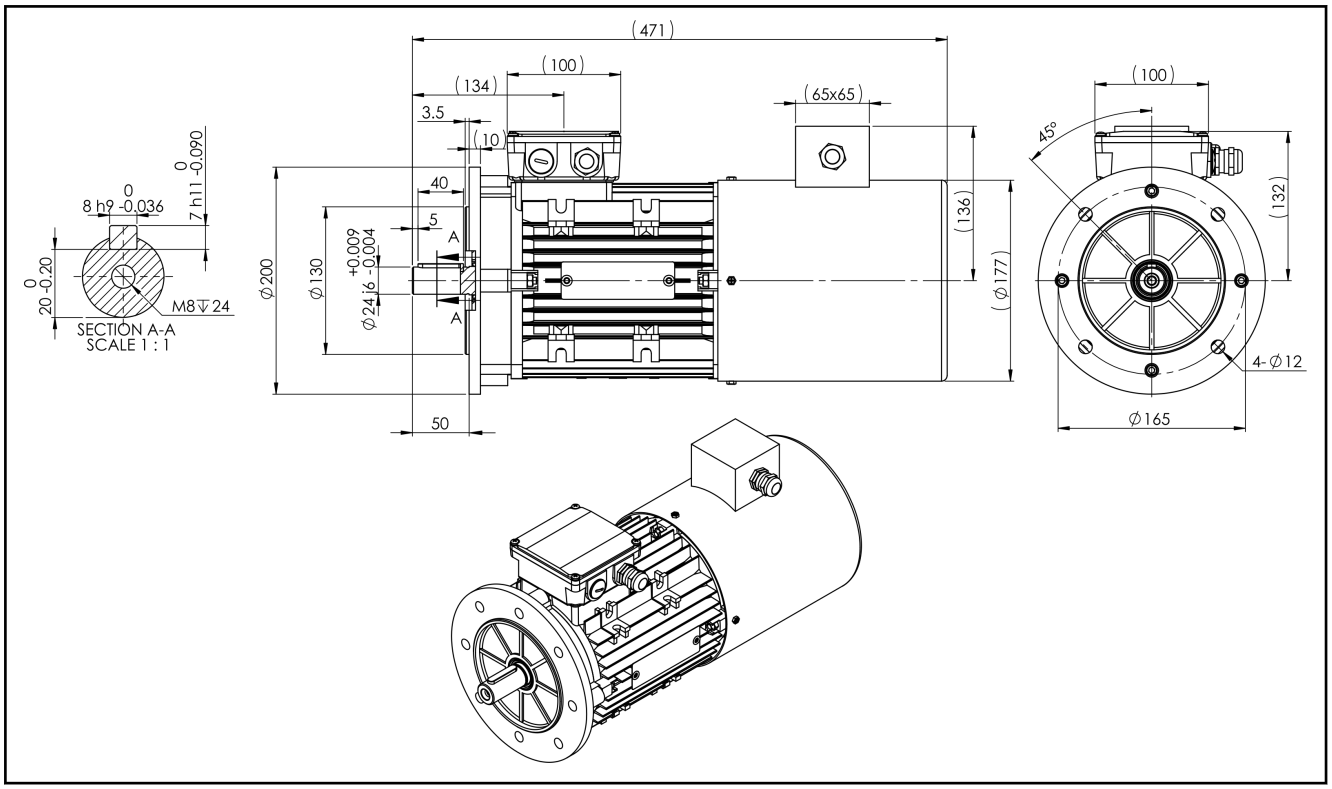

*Fig. 4-3: Specifications MOT-FC-EV2-*BV-*90L-4-5CA-**01.5**-A3T-HOY*

4.5 Technical Data Frame Size 100L / 2.2 kW

4.5.1 Data Sheet

Designation	Symbol	Unit	MOT-FC 100L / 2.2 kW
Rated power	P_N	kW	2.20
Rated torque	M_N	Nm	14.6
Rated current	I_N	A	4.6
Rated frequency	f_N	Hz	50.0
Rated voltage	U_N	V	400
Winding interconnection	-	-	Y
Rated speed	n_N	min^{-1}	1,440
Performance factor	cosφ	-	0.78
Efficiency at 100%-load	η_{100}	-	0.85
Efficiency at 75%-load	η_{75}	-	0.85
Efficiency at 50%-load	η_{50}	-	0.84
Maximum torque	M_{max}	Nm	33.0
Maximum current	I_{max}	A	11.5
Maximum velocity	n_{max}	min^{-1}	4,000
Mechanical parameters			
Number of pole pairs	o	-	2
Bearing A-side	-	-	6206-ZZ/C3
Bearing B-side	-	-	6206-ZZ/C3
Moment of inertia of the rotor	J_{rot}	kg * m²	0.0078000
Mass	m_{mot}	kg	26.0
Sound pressure level	L_P	dB[A]	63
Cable gland at terminal box	-	mm	M20 x 1.5
Terminal board bolts	-	mm	M4
Ø-clamping range of connection clamps	-	mm	8 ... 13
			Latest amendment: 2014-06-30

Tab. 4-4: Technical Data Frame Size 100L / 2.2 kW

4.5.2 Frame Size 100L / 2.2 kW Specifications

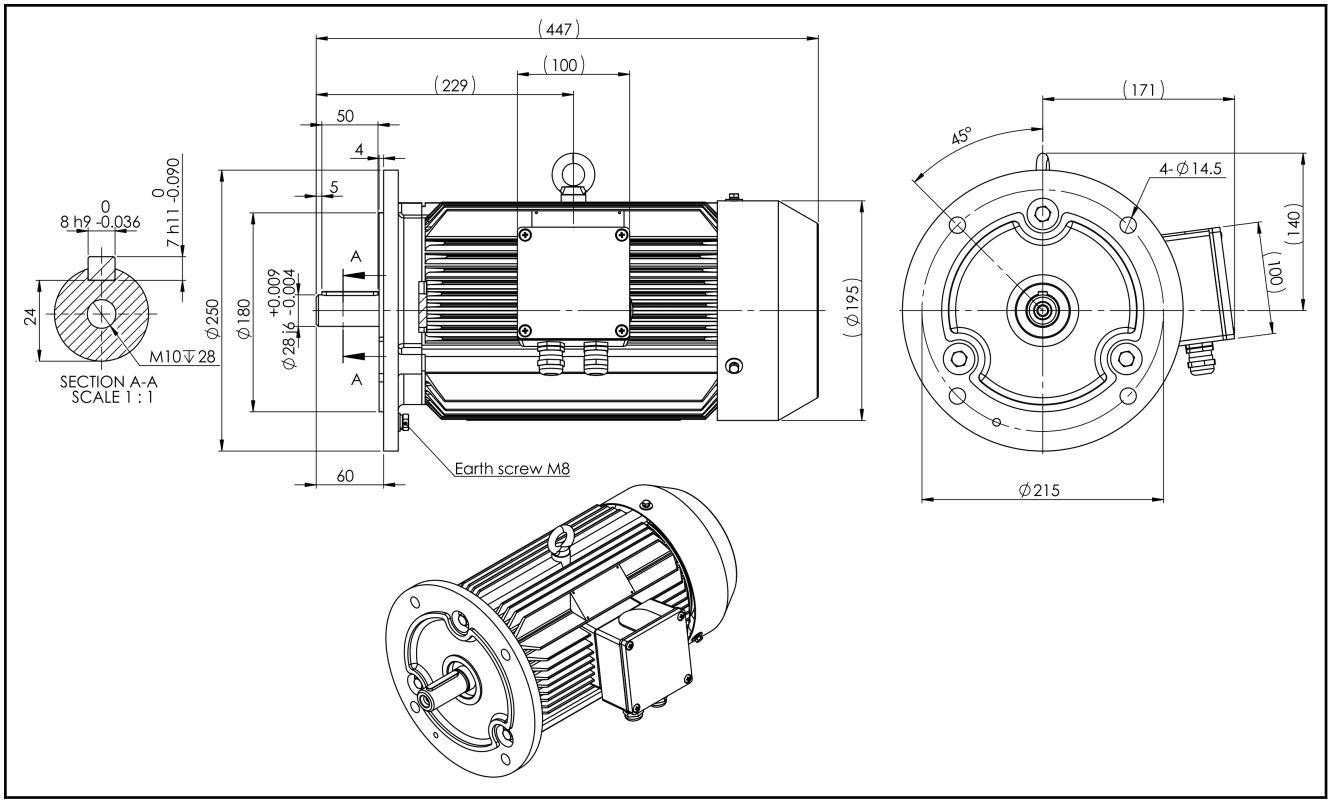

*Fig. 4-4: Specifications MOT-FC-ET2-*BV-100L-4-5CA-**02.2**-A3T-HOY*

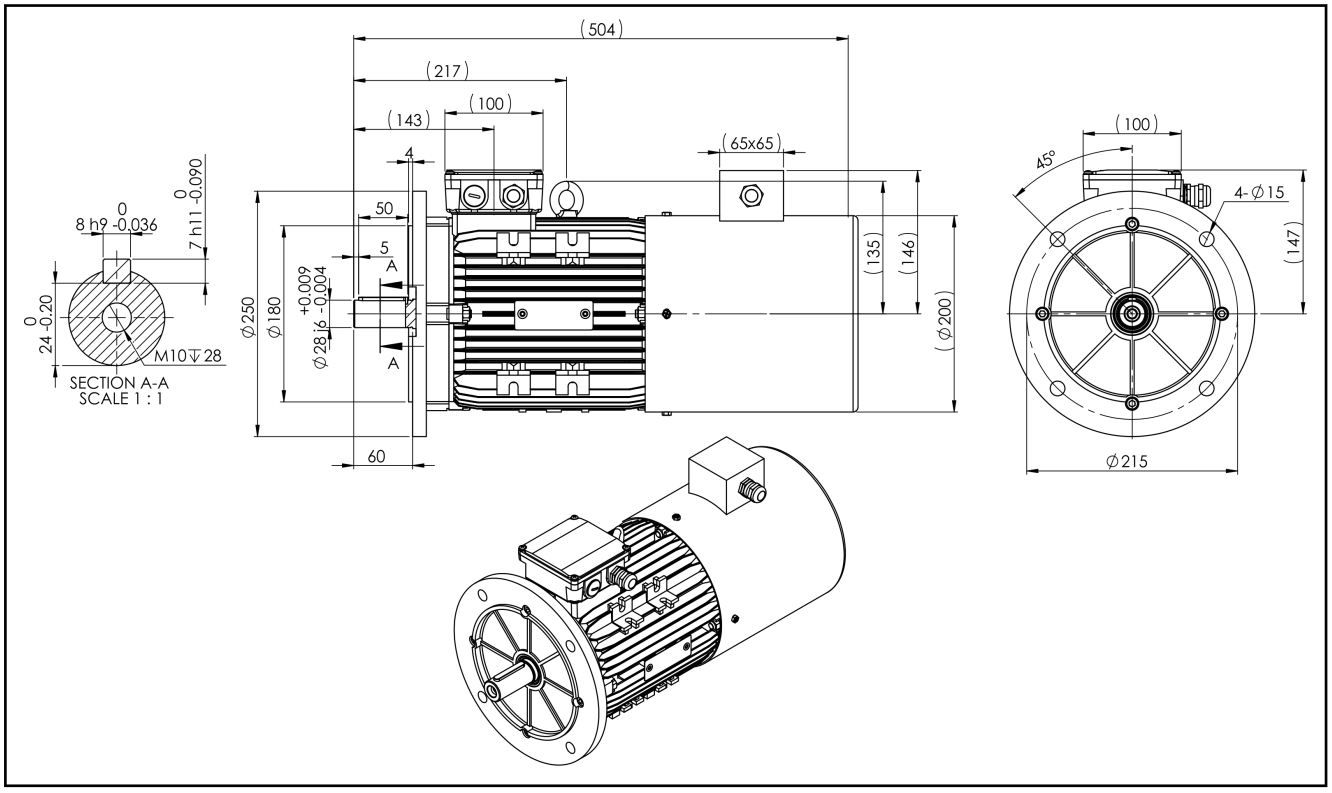

*Fig. 4-5: Specifications MOT-FC-EV2-*BV-100L-4-5CA-**02.2**-A3T-HOY*

4.6 Technical Data Frame Size 100L / 3 kW

4.6.1 Data Sheet

Designation	Symbol	Unit	MOT-FC 100L / 3 kW
Rated power	P_N	kW	3.00
Rated torque	M_N	Nm	19.9
Rated current	I_N	A	6.1
Rated frequency	f_N	Hz	50.0
Rated voltage	U_N	V	400
Winding interconnection	-	-	Y
Rated speed	n_N	min^{-1}	1,440
Performance factor	cosφ	-	0.77
Efficiency at 100%-load	η_{100}	-	0.86
Efficiency at 75%-load	η_{75}	-	0.86
Efficiency at 50%-load	η_{50}	-	0.84
Maximum torque	M_{max}	Nm	46.0
Maximum current	I_{max}	A	15.2
Maximum velocity	n_{max}	min^{-1}	4,000
Mechanical parameters			
Number of pole pairs	o	-	2
Bearing A-side	-	-	6206-ZZ/C3
Bearing B-side	-	-	6206-ZZ/C3
Moment of inertia of the rotor	J_{rot}	kg * m²	0.0087000
Mass	m_{mot}	kg	28.0
Sound pressure level	L_P	dB[A]	63
Cable gland at terminal box	-	mm	M20 x 1.5
Terminal board bolts	-	mm	M4
Ø-clamping range of connection clamps	-	mm	8 ... 13
			Latest amendment: 2014-06-30

Tab. 4-5: Technical Data Frame Size 100L / 3 kW

4.6.2 Frame Size 100L / 3 kW Specifications

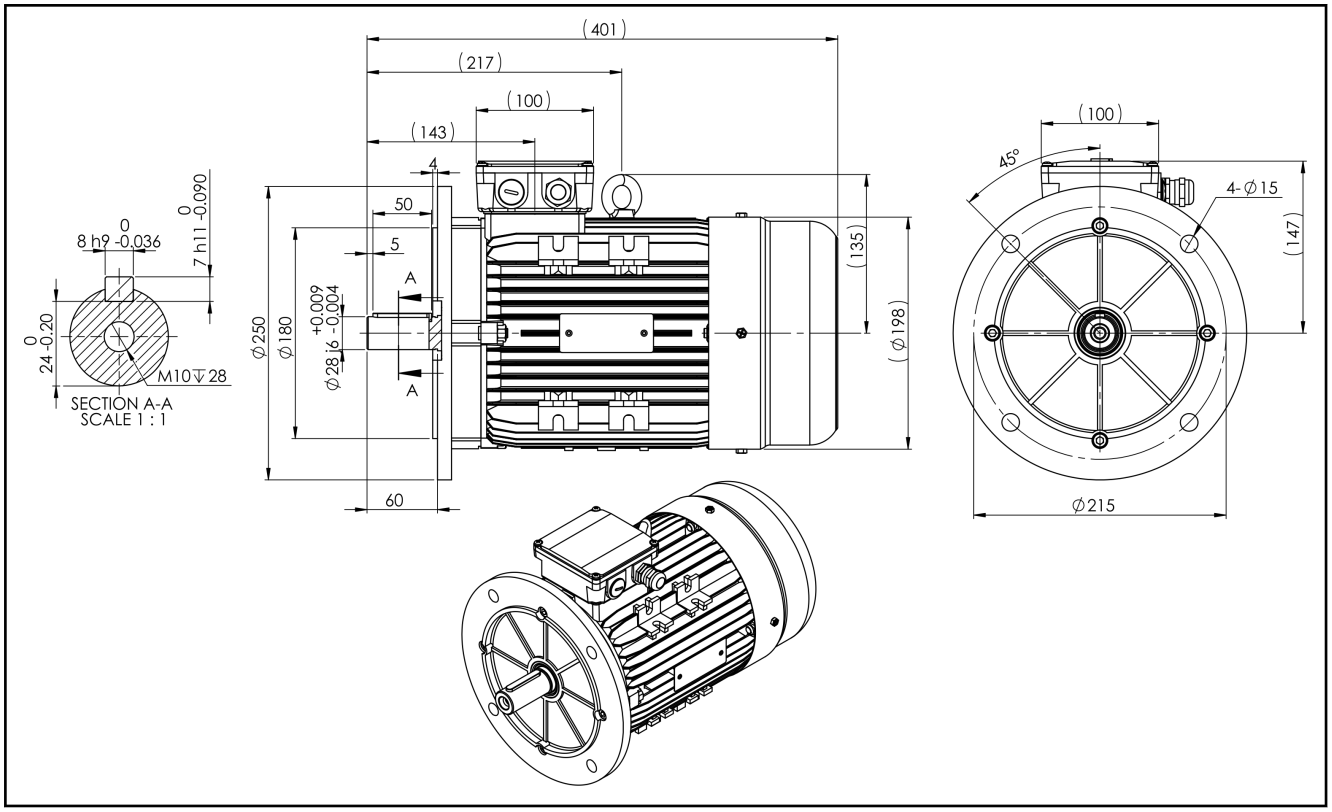

*Fig. 4-6: Specifications MOT-FC-ET2-*BV-100L-4-5CA-**0003**-A3T-HOY*

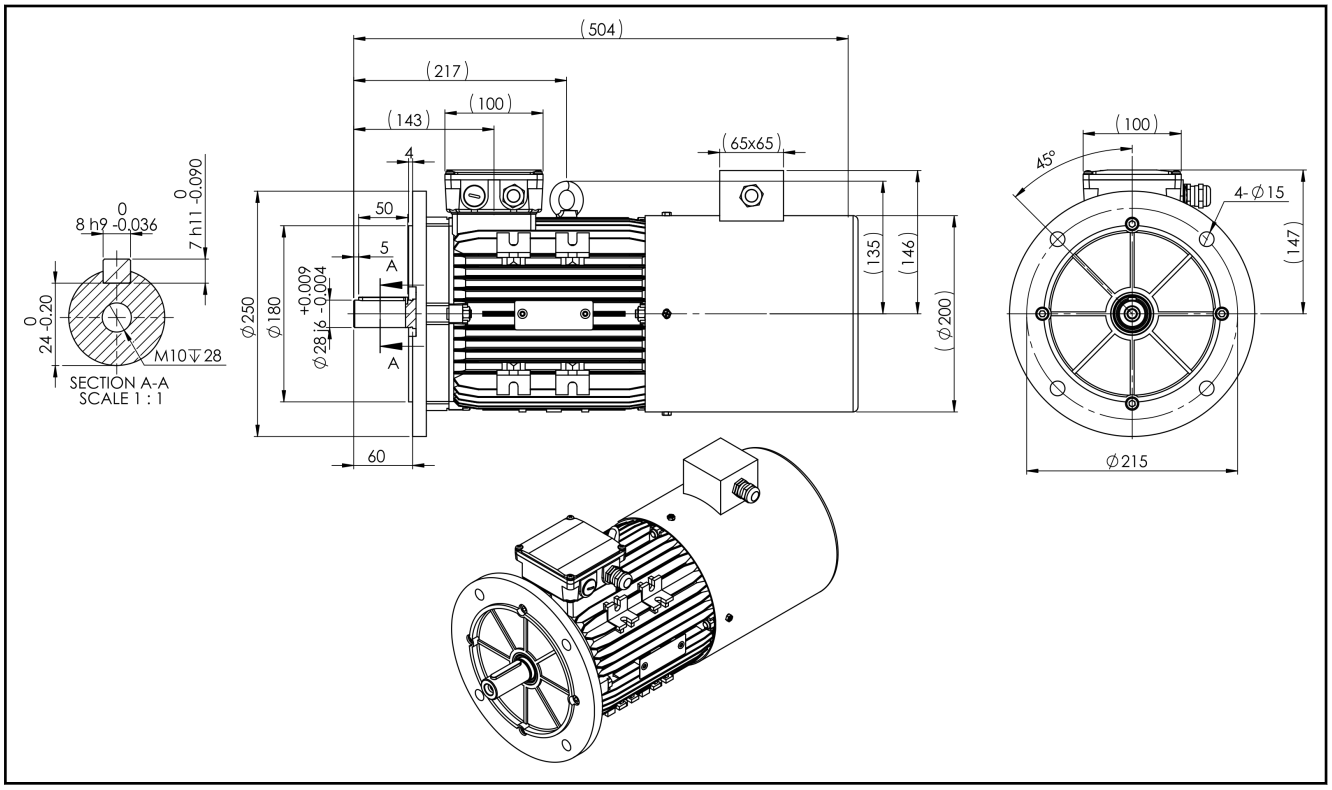

*Fig. 4-7: Specifications MOT-FC-EV2-*BV-100L-4-5CA-**0003**-A3T-HOY*

4.7 Technical Data Frame Size 112M / 4 kW

4.7.1 Data Sheet

Designation	Symbol	Unit	MOT-FC 112M / 4 kW
Rated power	P_N	kW	4.00
Rated torque	M_N	Nm	26.9
Rated current	I_N	A	7.9
Rated frequency	f_N	Hz	50.0
Rated voltage	U_N	V	400
Winding interconnection	-	-	D
Rated speed	n_N	min^{-1}	1,420
Performance factor	cosφ	-	0.84
Efficiency at 100%-load	η_{100}	-	0.87
Efficiency at 75%-load	η_{75}	-	0.88
Efficiency at 50%-load	η_{50}	-	0.87
Maximum torque	M_{max}	Nm	60.0
Maximum current	I_{max}	A	19.7
Maximum velocity	n_{max}	min^{-1}	4,000
Mechanical parameters			
Number of pole pairs	o	-	2
Bearing A-side	-	-	6306-ZZ/C3
Bearing B-side	-	-	6306-ZZ/C3
Moment of inertia of the rotor	J_{rot}	kg * m²	0.0190000
Mass	m_{mot}	kg	37.0
Sound pressure level	L_P	dB[A]	66
Cable gland at terminal box	-	mm	M20 x 1.5
Terminal board bolts	-	mm	M5
Ø-clamping range of connection clamps	-	mm	8 ... 13
			Latest amendment: 2014-06-30

Tab. 4-6: Technical Data Frame Size 112M / 4 kW

4.7.2 Frame Size 112M / 4 kW Specifications

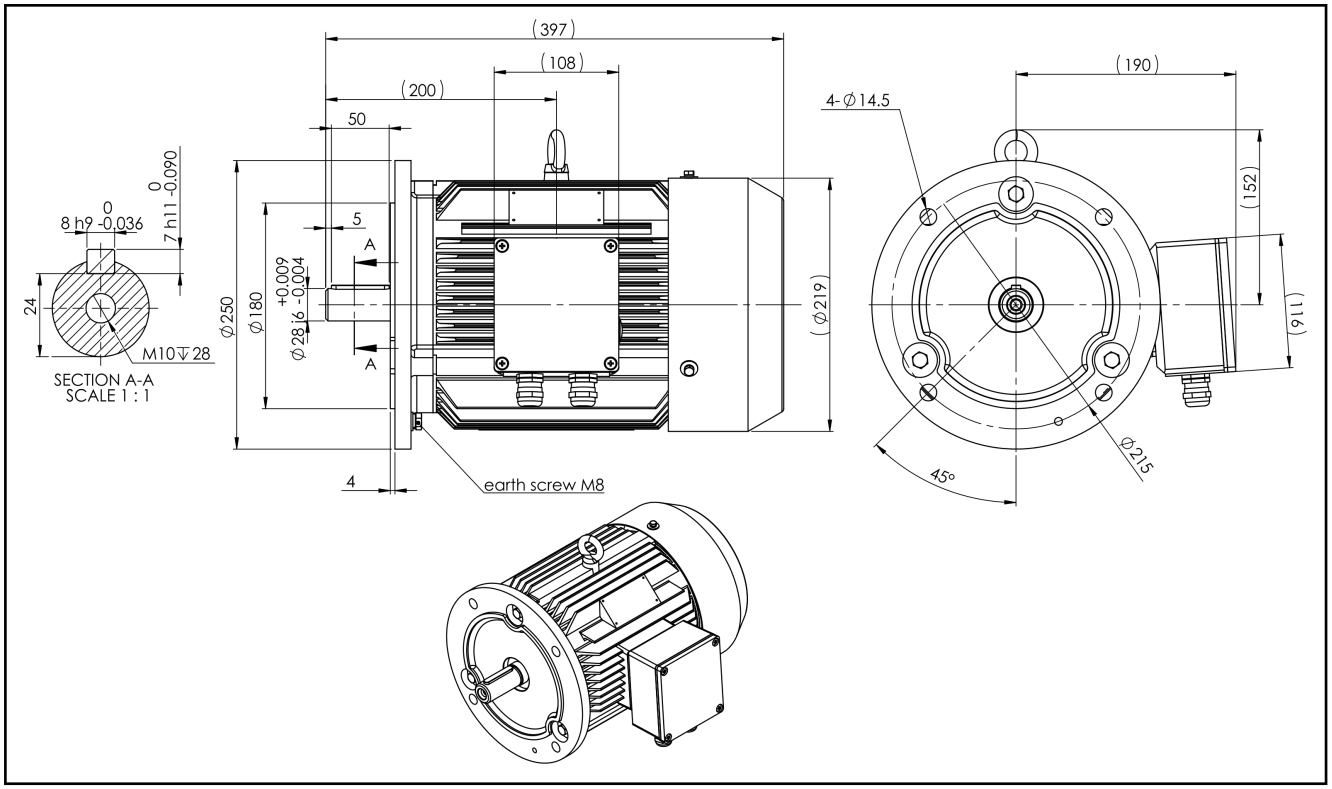

*Fig. 4-8: Specifications MOT-FC-ET2-*BV-112M-4-5CB-**0004**-A3T-HOY*

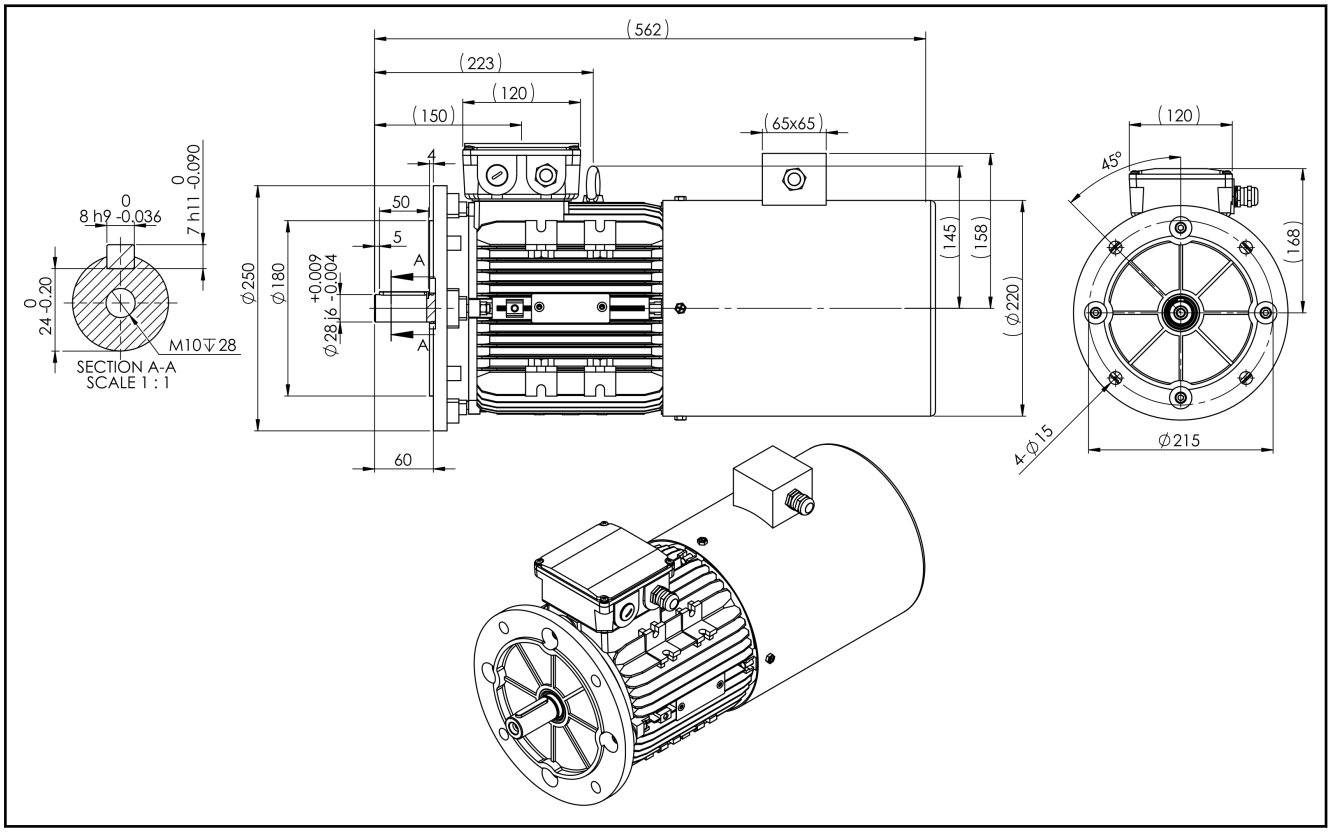

*Fig. 4-9: Specifications MOT-FC-EV2-*BV-112M-4-5CB-**0004**-A3T-HOY*

4.8 Technical Data Frame Size 132S / 5.5 kW

4.8.1 Data Sheet

Designation	Symbol	Unit	MOT-FC 132S / 5.5 kW
Rated power	P_N	kW	5.50
Rated torque	M_N	Nm	36.5
Rated current	I_N	A	11.0
Rated frequency	f_N	Hz	50.0
Rated voltage	U_N	V	400
Winding interconnection	-	-	D
Rated speed	n_N	min^{-1}	1,440
Performance factor	cosφ	-	0.80
Efficiency at 100%-load	η_{100}	-	0.88
Efficiency at 75%-load	η_{75}	-	0.88
Efficiency at 50%-load	η_{50}	-	0.88
Maximum torque	M_{max}	Nm	83.0
Maximum current	I_{max}	A	27.5
Maximum velocity	n_{max}	min^{-1}	4,000
Mechanical parameters			
Number of pole pairs	o	-	2
Bearing A-side	-	-	6308-ZZ/C3
Bearing B-side	-	-	6308-ZZ/C3
Moment of inertia of the rotor	J_{rot}	kg * m²	0.0330000
Mass	m_{mot}	kg	51.0
Sound pressure level	L_P	dB[A]	66
Cable gland at terminal box	-	mm	M25 x 1.5 (2x)
Terminal board bolts	-	mm	M5
Ø-clamping range of connection clamps	-	mm	11 ... 17
			Latest amendment: 2014-06-30

Tab. 4-7: Technical Data Frame Size 132S / 5.5 kW

4.8.2 Frame Size 132S / 5.5 kW Specifications

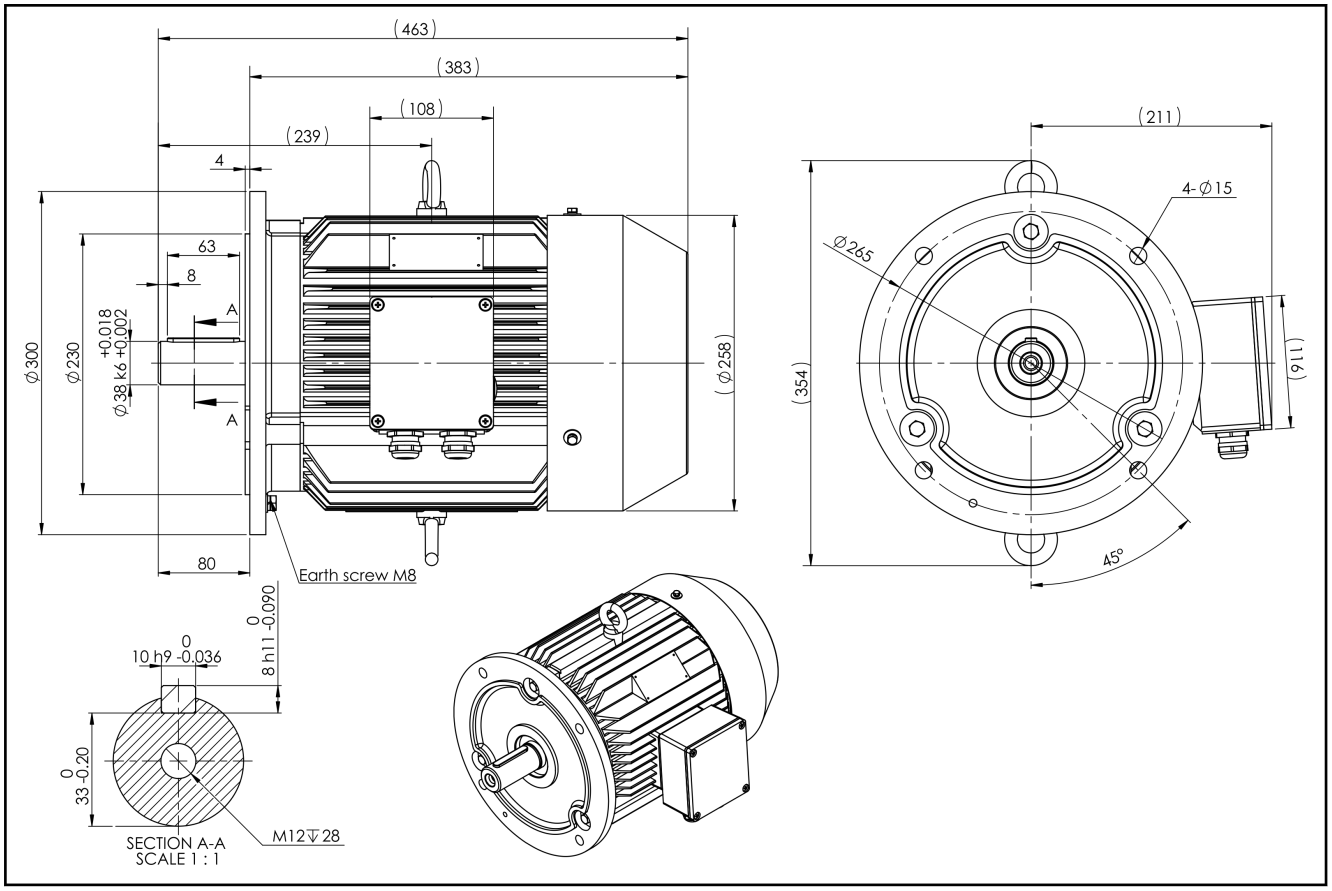

*Fig. 4-10: Specifications MOT-FC-ET2-*BV-132S-4-5CB-**05.5**-A3T-HOY*

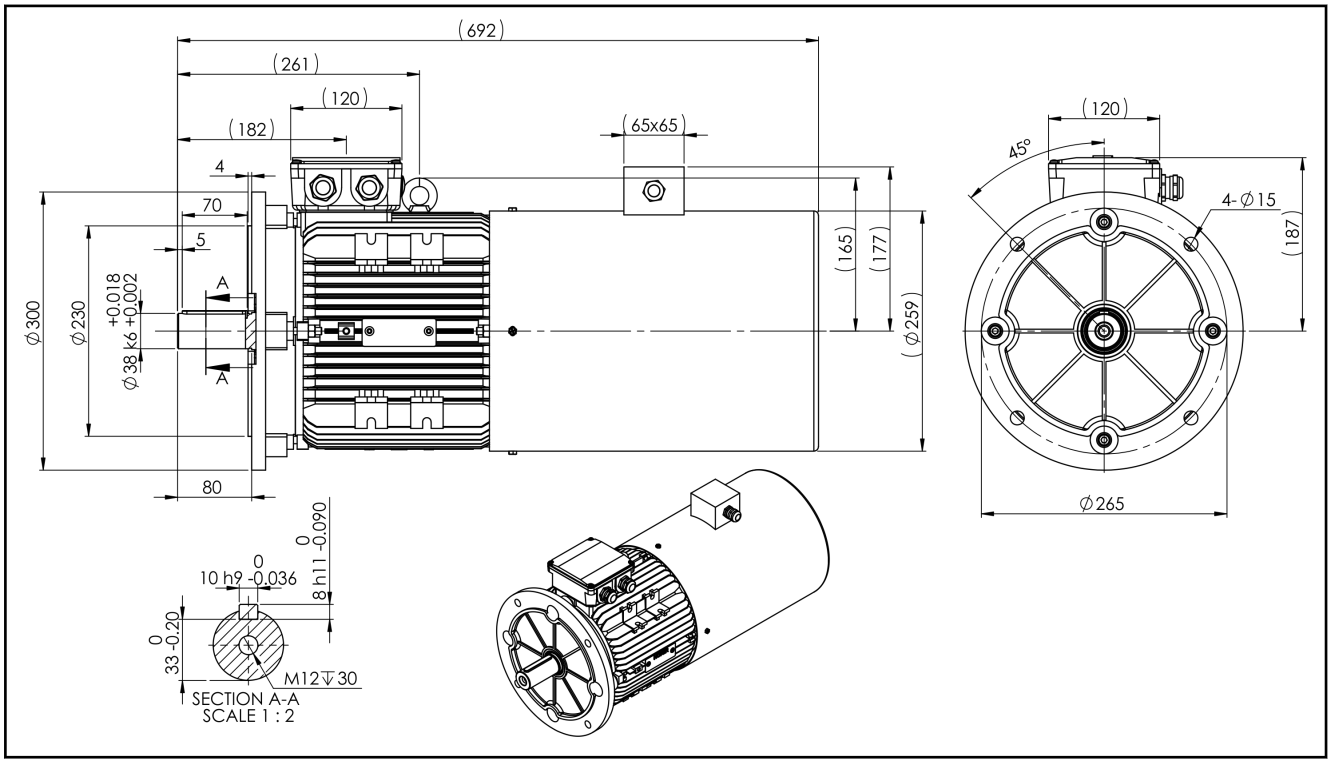

*Fig. 4-11: Specifications MOT-FC-EV2-*BV-132S-4-5CB-**05,5**-A3T-HOY*

4.9 Technical Data Frame Size 132M / 7.5 kW

4.9.1 Data Sheet

Designation	Symbol	Unit	MOT-FC 132M / 7.5 kW
Rated power	P_N	kW	7.50
Rated torque	M_N	Nm	49.1
Rated current	I_N	A	15.0
Rated frequency	f_N	Hz	50.0
Rated voltage	U_N	V	400
Winding interconnection	-	-	D
Rated speed	n_N	min^{-1}	1,460
Performance factor	cosφ	-	0.82
Efficiency at 100%-load	η_{100}	-	0.89
Efficiency at 75%-load	η_{75}	-	0.90
Efficiency at 50%-load	η_{50}	-	0.89
Maximum torque	M_{max}	Nm	113.0
Maximum current	I_{max}	A	37.5
Maximum velocity	n_{max}	min^{-1}	4,000
Mechanical parameters			
Number of pole pairs	o	-	2
Bearing A-side	-	-	6308-ZZ/C3
Bearing B-side	-	-	6308-ZZ/C3
Moment of inertia of the rotor	J_{rot}	kg * m²	0.0410000
Mass	m_{mot}	kg	62.0
Sound pressure level	L_P	dB[A]	66
Cable gland at terminal box	-	mm	M25 x 1.5 (2x)
Terminal board bolts	-	mm	M5
Ø-clamping range of connection clamps	-	mm	11 ... 17
			Latest amendment: 2014-06-30

Tab. 4-8: Technical Data Frame Size 132M / 7.5 kW

4.9.2 Frame Size 132M / 7.5 kW Specifications

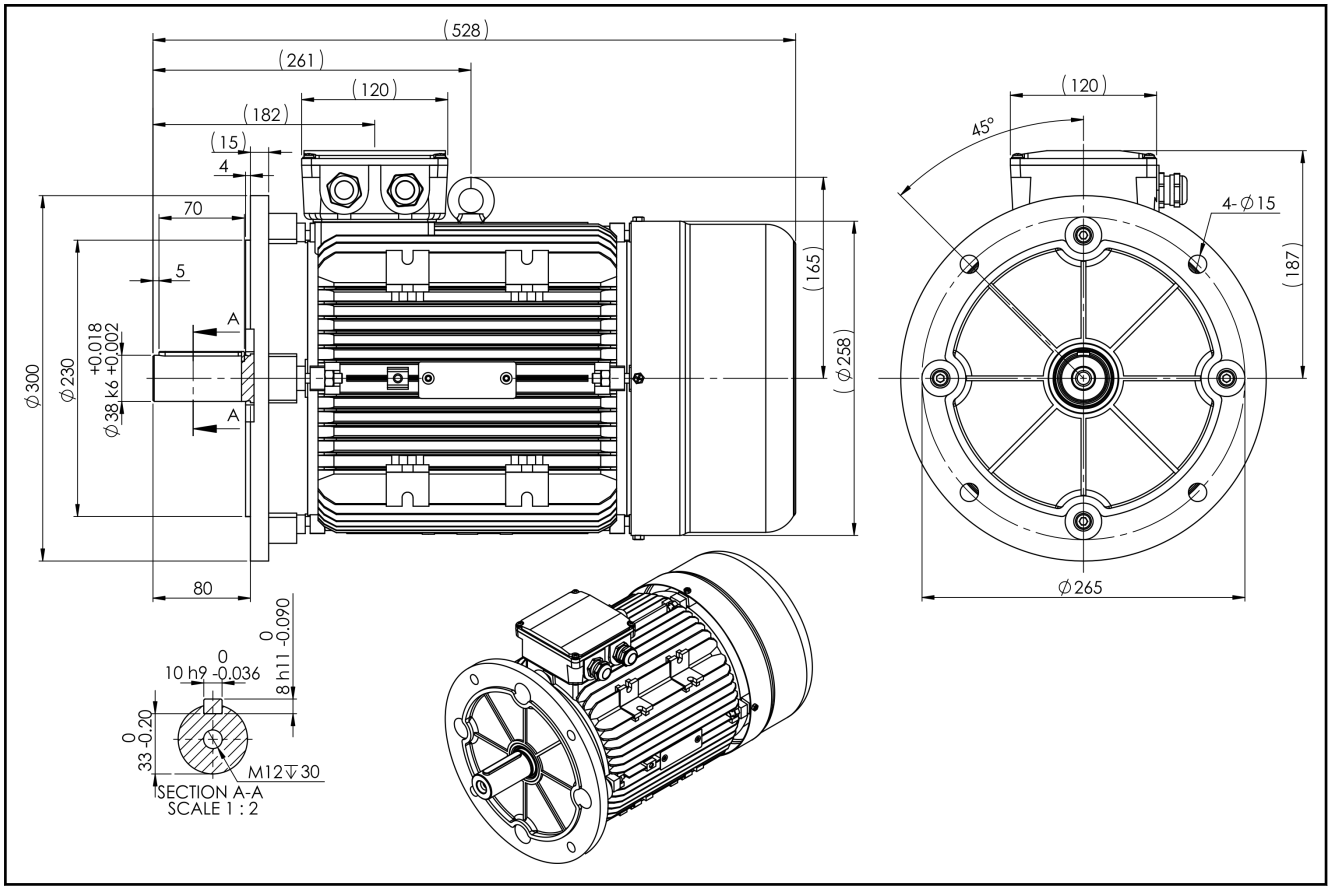

*Fig. 4-12: Specifications MOT-FC-ET2-*BV-132M-4-5CB-**07.5**-A3T-HOY*

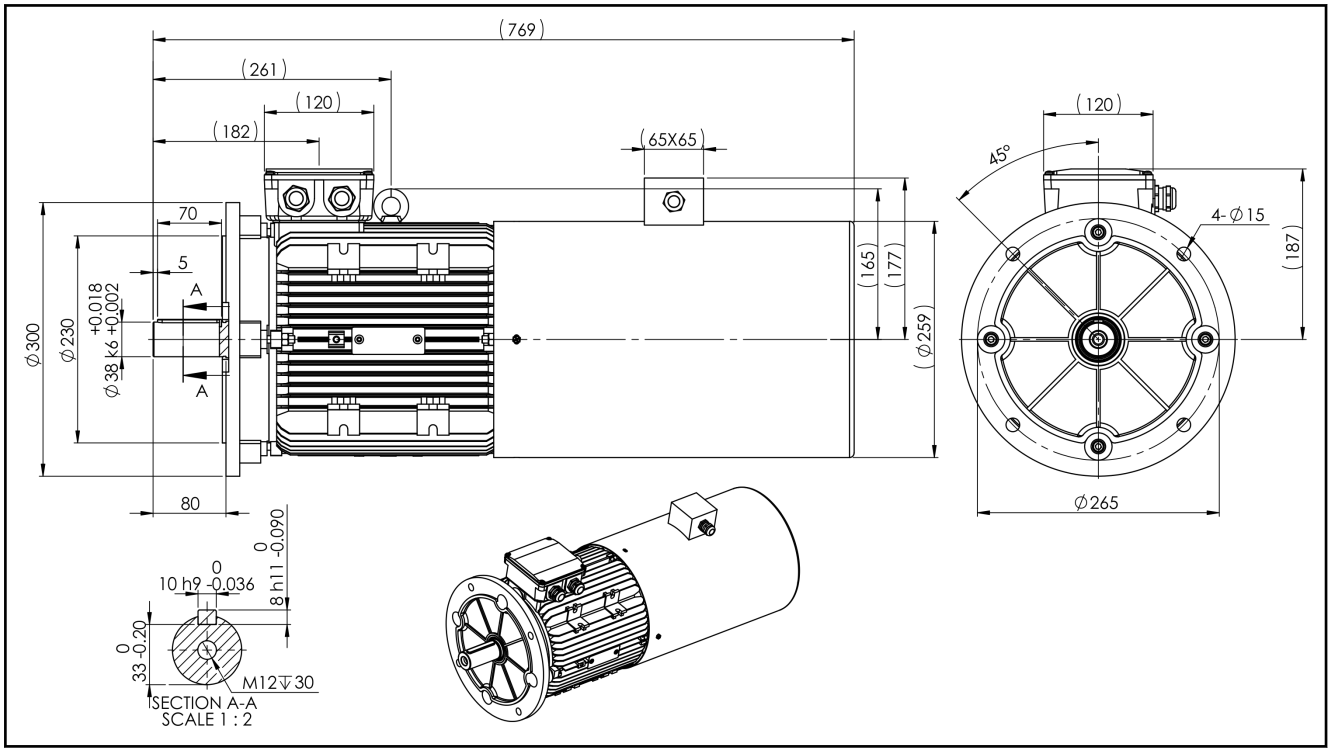

*Fig. 4-13: Specifications MOT-FC-EV2-*BV-132M-4-5CB-**07,5**-A3T-HOY*

4.10 Technical Data Frame Size 160M / 11 kW

4.10.1 Data Sheet

Designation	Symbol	Unit	MOT-FC 160M / 11 kW
Rated power	P_N	kW	11.00
Rated torque	M_N	Nm	72.0
Rated current	I_N	A	21.0
Rated frequency	f_N	Hz	50.0
Rated voltage	U_N	V	400
Winding interconnection	-	-	D
Rated speed	n_N	min^{-1}	1,460
Performance factor	cosφ	-	0.84
Efficiency at 100%-load	η_{100}	-	0.90
Efficiency at 75%-load	η_{75}	-	0.90
Efficiency at 50%-load	η_{50}	-	0.88
Maximum torque	M_{max}	Nm	166.0
Maximum current	I_{max}	A	43.1
Maximum velocity	n_{max}	min^{-1}	3,800
Mechanical parameters			
Number of pole pairs	o	-	2
Bearing A-side	-	-	6309-ZZ/C3
Bearing B-side	-	-	6309-ZZ/C3
Moment of inertia of the rotor	J_{rot}	kg * m²	0.0970000
Mass	m_{mot}	kg	123.0
Sound pressure level	L_P	dB[A]	64
Cable gland at terminal box	-	mm	M40 x 1.5 (2x)
Terminal board bolts	-	mm	M6
Ø-clamping range of connection clamps	-	mm	22 ... 32
			Latest amendment: 2014-06-30

Tab. 4-9: Technical Data Frame Size 160M / 11 kW

4.10.2 Frame Size 160M / 11 kW Specifications

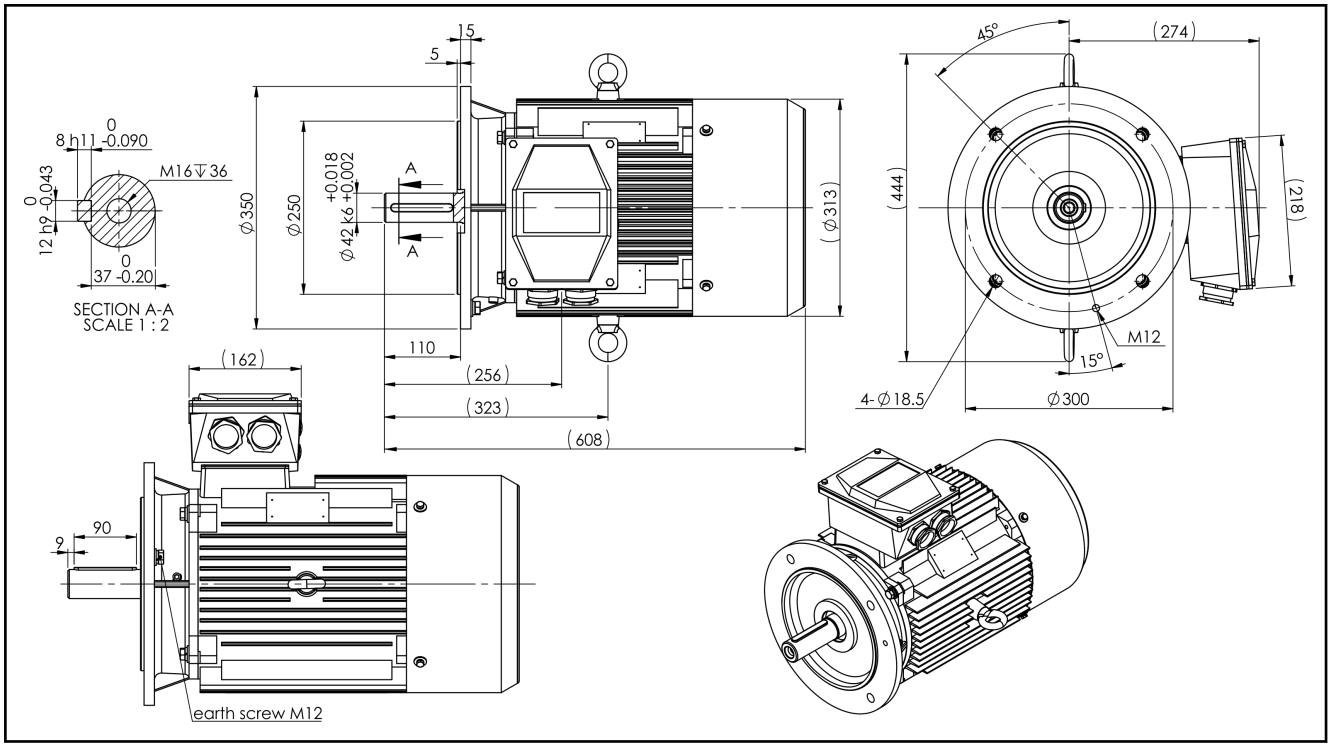

*Fig. 4-14: Specifications MOT-FC-ET2-*BV-160M-4-5CB-**0011**-C3T-HOY*

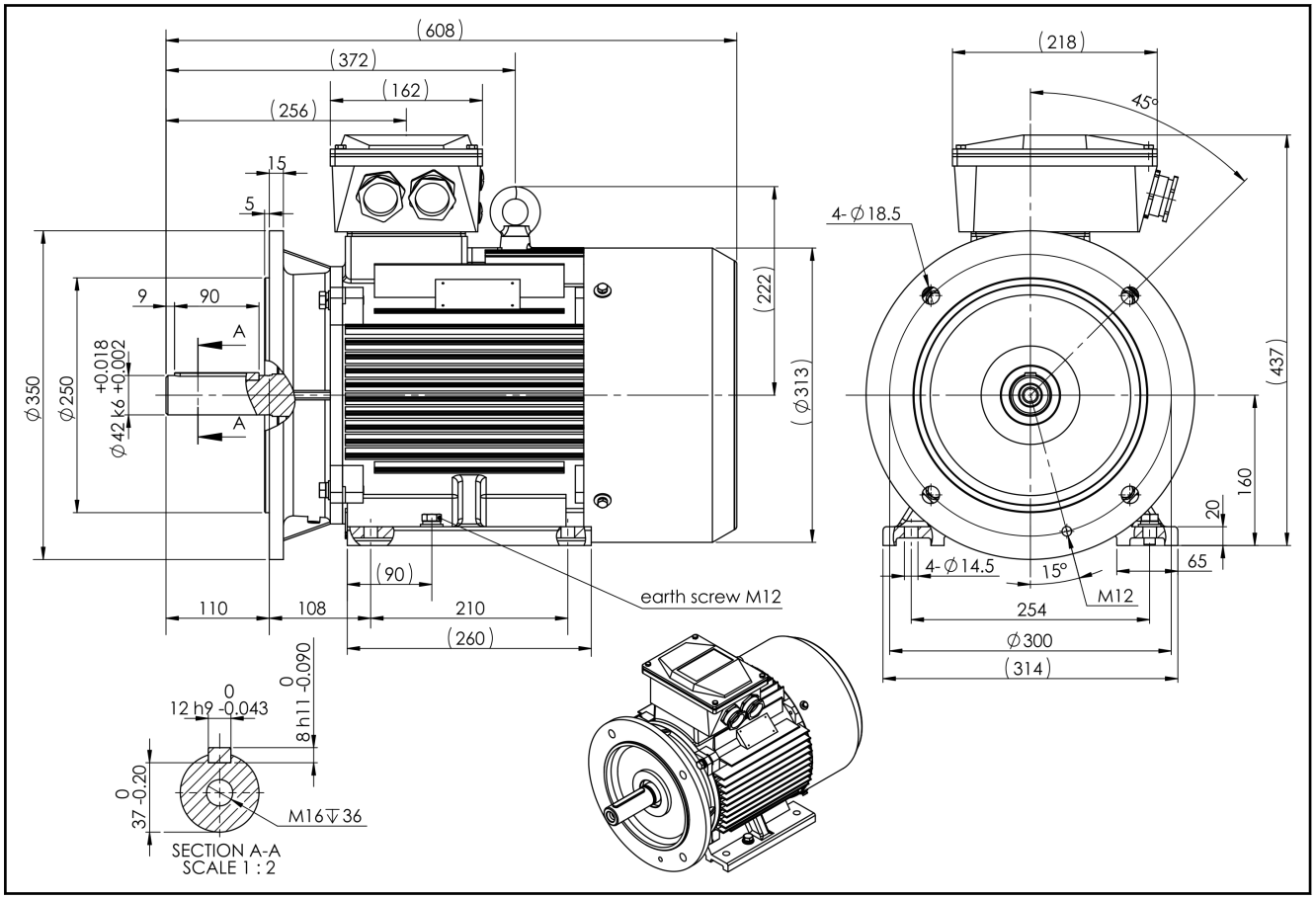

*Fig. 4-15: Specifications MOT-FC-ET2-B35-160M-4-5CB-**0011**-C3T-HOY*

Technical Data

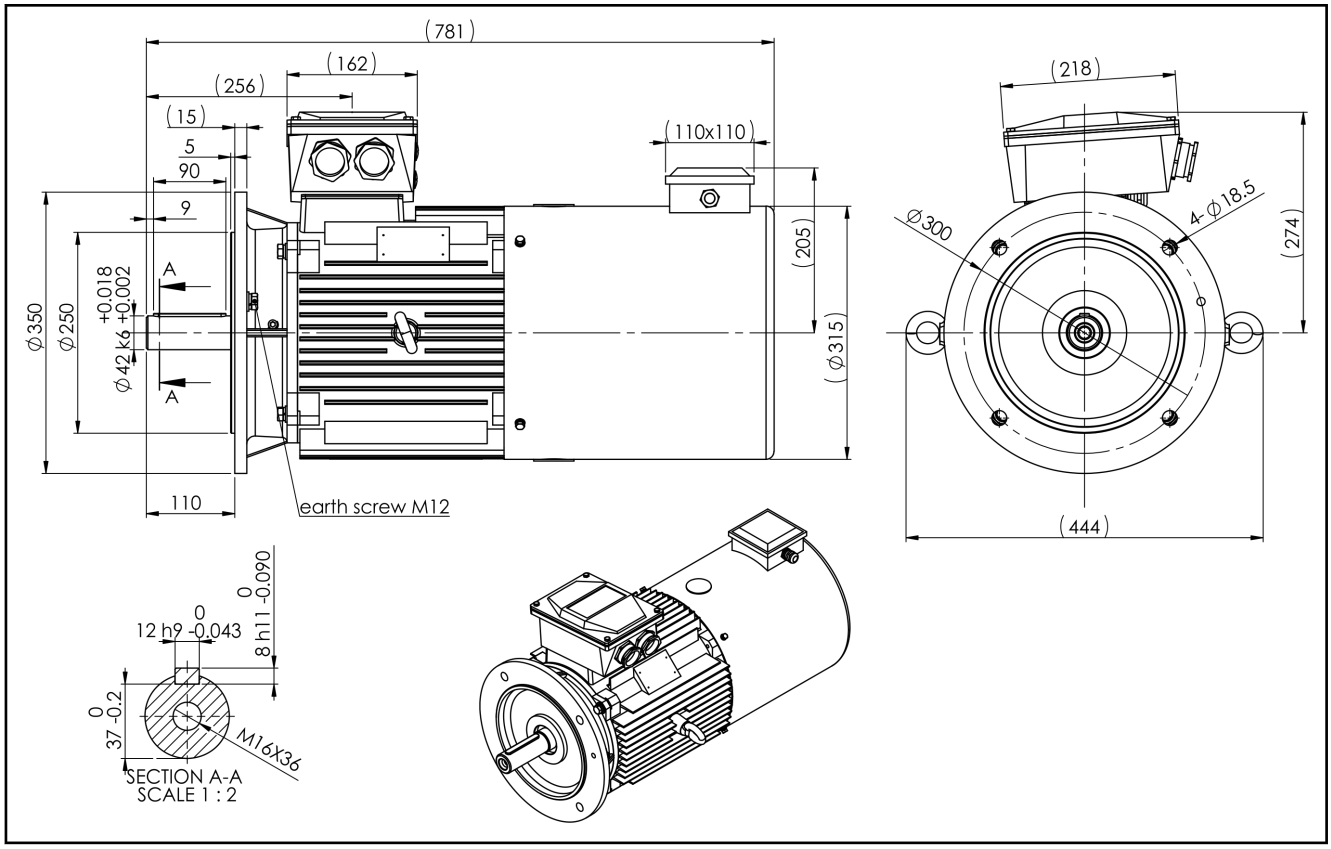

*Fig. 4-16: Specifications MOT-FC-EV2-*BV-160M-4-5CB-**0011**-C3T-HOY*

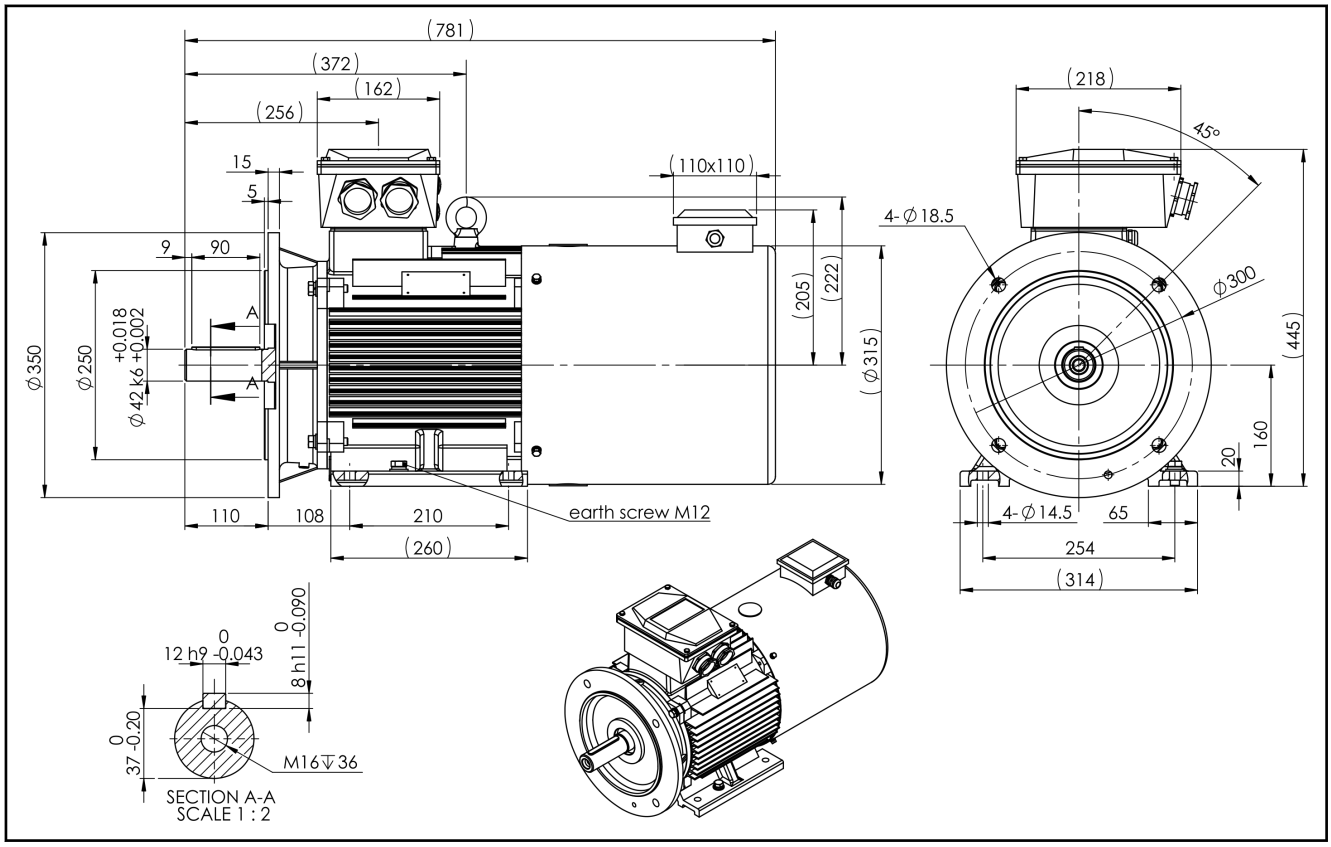

*Fig. 4-17: SpecificationsMOT-FC-EV2-B35-160M-4-5CB-**0011**-C3T-HOY*

4.11 Technical Data Frame Size 160L / 15 kW

4.11.1 Data Sheet

Designation	Symbol	Unit	MOT-FC 160L / 15 kW
Rated power	P_N	kW	15.00
Rated torque	M_N	Nm	98.1
Rated current	I_N	A	28.0
Rated frequency	f_N	Hz	50.0
Rated voltage	U_N	V	400
Winding interconnection	-	-	D
Rated speed	n_N	min^{-1}	1,460
Performance factor	cosφ	-	0.85
Efficiency at 100%-load	η_{100}	-	0.91
Efficiency at 75%-load	η_{75}	-	0.90
Efficiency at 50%-load	η_{50}	-	0.89
Maximum torque	M_{max}	Nm	225.0
Maximum current	I_{max}	A	60.4
Maximum velocity	n_{max}	min^{-1}	3,800
Mechanical parameters			
Number of pole pairs	o	-	2
Bearing A-side	-	-	6309-ZZ/C3
Bearing B-side	-	-	6309-ZZ/C3
Moment of inertia of the rotor	J_{rot}	kg * m²	0.1250000
Mass	m_{mot}	kg	153.0
Sound pressure level	L_P	dB[A]	64
Cable gland at terminal box	-	mm	M40 x 1.5 (2x)
Terminal board bolts	-	mm	M6
Ø-clamping range of connection clamps	-	mm	22 ... 32
			Latest amendment: 2014-06-30

Tab. 4-10: Technical Data Frame Size 160L / 15 kW

Technical Data

4.11.2 Frame Size 160L / 15 kW Specifications

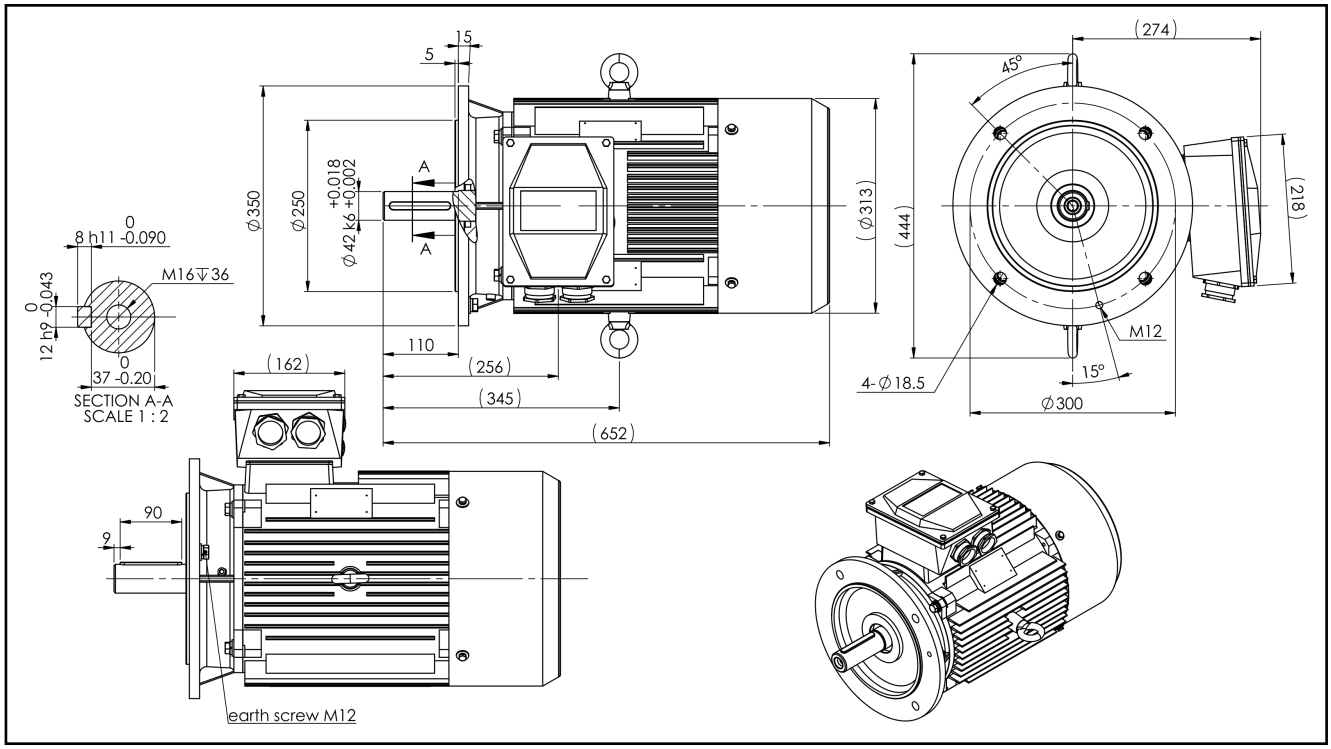

*Fig. 4-18: Specifications MOT-FC-ET2-*BV-160L-4-5CB-**0015**-C3T-HOY*

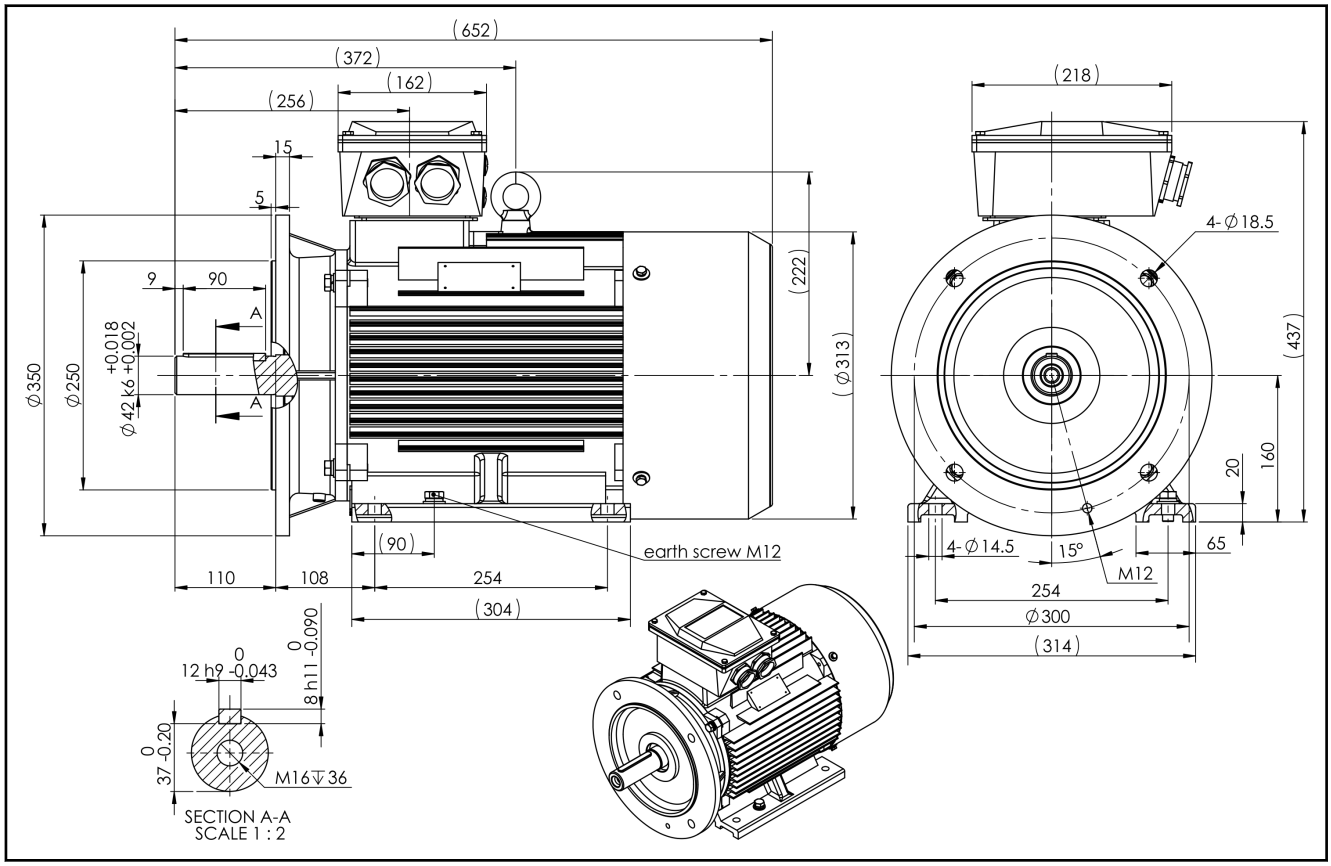

*Fig. 4-19: Specifications MOT-FC-ET2-B35-160L-4-5CB-**0015**-C3T-HOY*

Technical Data

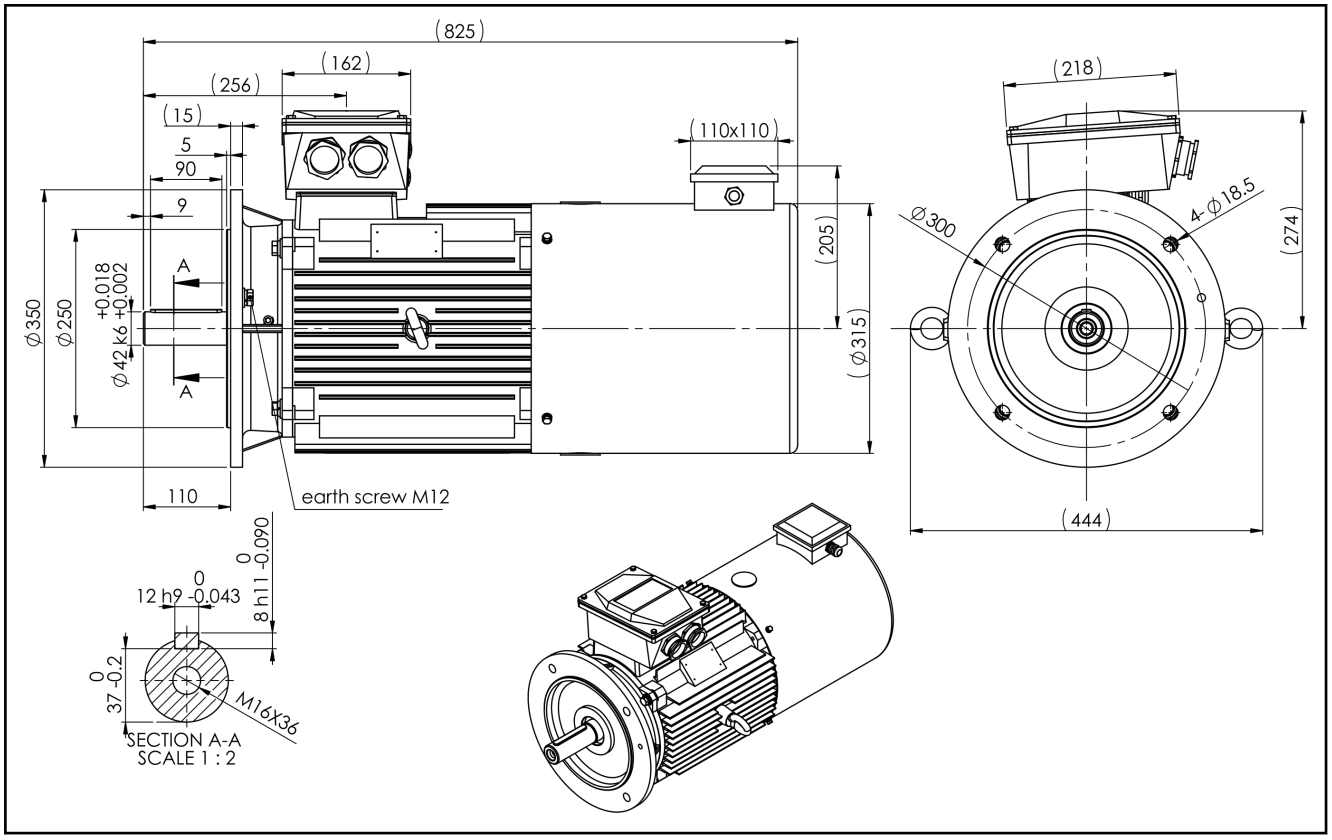

*Fig. 4-20: Specifications MOT-FC-EV2-*BV-160L-4-5CB-**0015**-C3T-HOY*

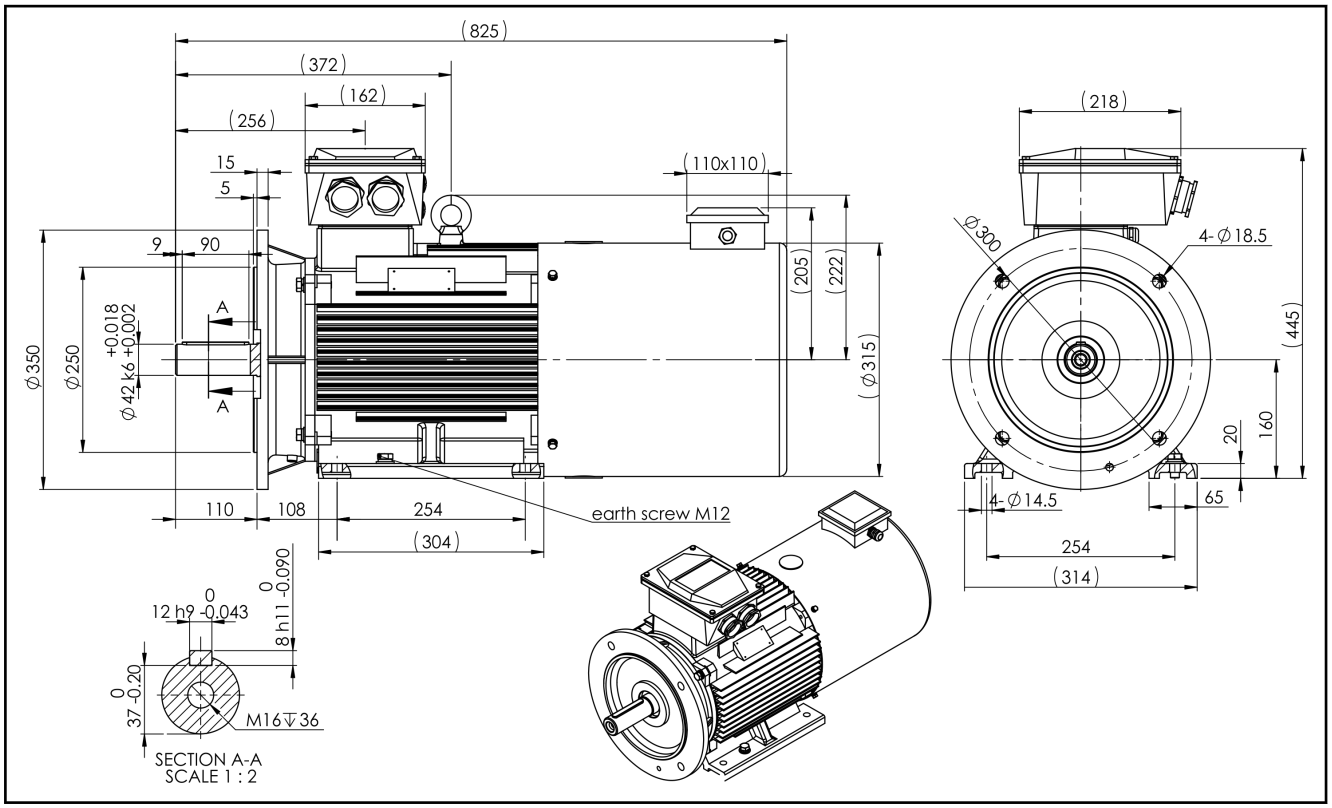

*Fig. 4-21: Specifications MOT-FC-EV2-B35-160L-4-5CB-**0015**-C3T-HOY*

4.12 Technical Data Frame Size 180M / 18.5 kW

4.12.1 Data Sheet

Designation	Symbol	Unit	MOT-FC 180M / 18.5 kW
Rated power	P_N	kW	18.50
Rated torque	M_N	Nm	120.0
Rated current	I_N	A	34.0
Rated frequency	f_N	Hz	50.0
Rated voltage	U_N	V	400
Winding interconnection	-	-	D
Rated speed	n_N	min^{-1}	1,460
Performance factor	cosφ	-	0.86
Efficiency at 100%-load	η_{100}	-	0.91
Efficiency at 75%-load	η_{75}	-	0.91
Efficiency at 50%-load	η_{50}	-	0.90
Maximum torque	M_{max}	Nm	276.0
Maximum current	I_{max}	A	85.0
Maximum velocity	n_{max}	min^{-1}	3,800
Mechanical parameters			
Number of pole pairs	o	-	2
Bearing A-side	-	-	6311/C3
Bearing B-side	-	-	6311/C3 CIB
Moment of inertia of the rotor	J_{rot}	kg * m²	0.1600000
Mass	m_{mot}	kg	204.0
Sound pressure level	L_P	dB[A]	66
Cable gland at terminal box	-	mm	M40 x 1.5 (2x)
Terminal board bolts	-	mm	M6
Ø-clamping range of connection clamps	-	mm	22 ... 32
			Latest amendment: 2014-07-31

Tab. 4-11: Technical Data Frame Size 180M / 18.5 kW

4.12.2 Frame Size 180M / 18.5 kW Specifications

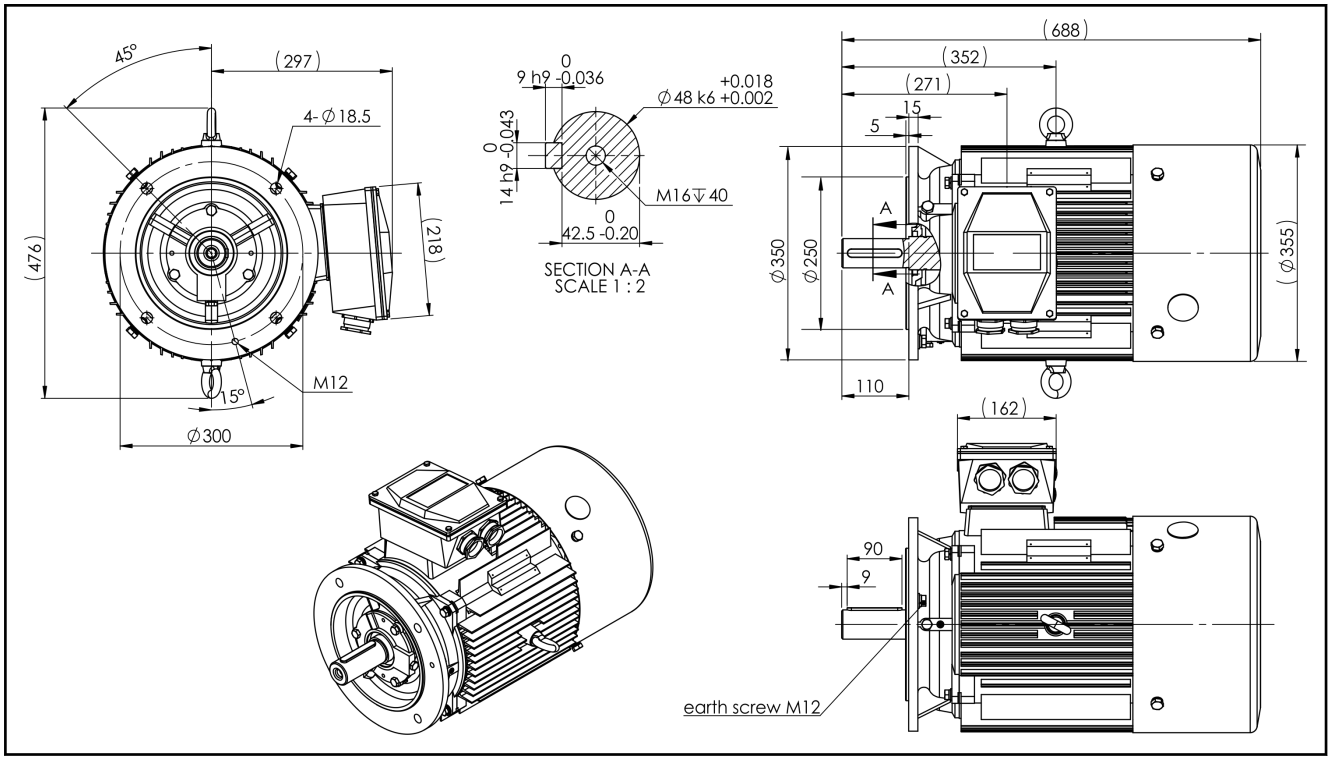

*Fig. 4-22: Specifications MOT-FC-ET2-*BV-180M-4-5CB-**18,5**-C3T-HOY*

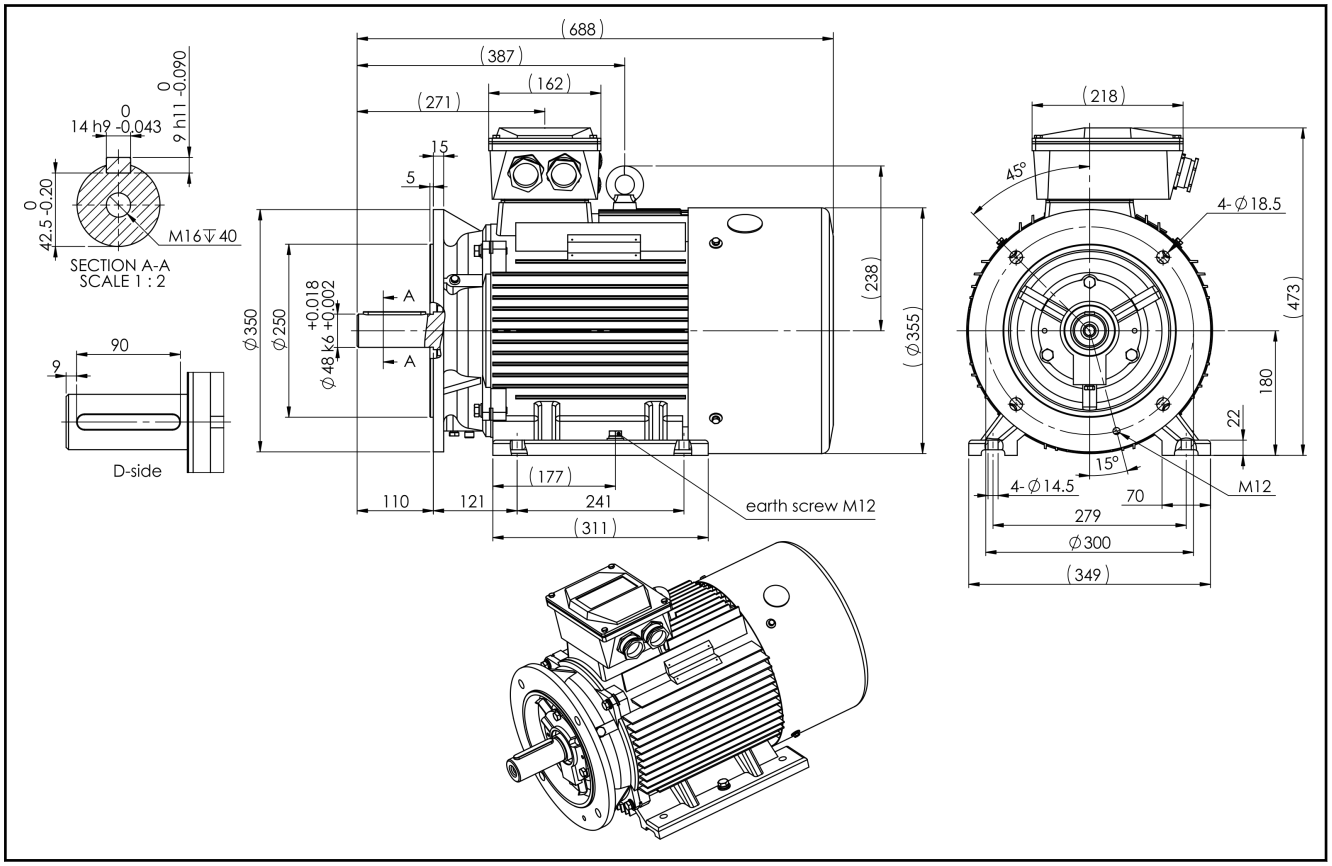

*Fig. 4-23: Specifications MOT-FC-ET2-B35-180M-4-5CB-**18,5**-C3T-HOY*

Technical Data

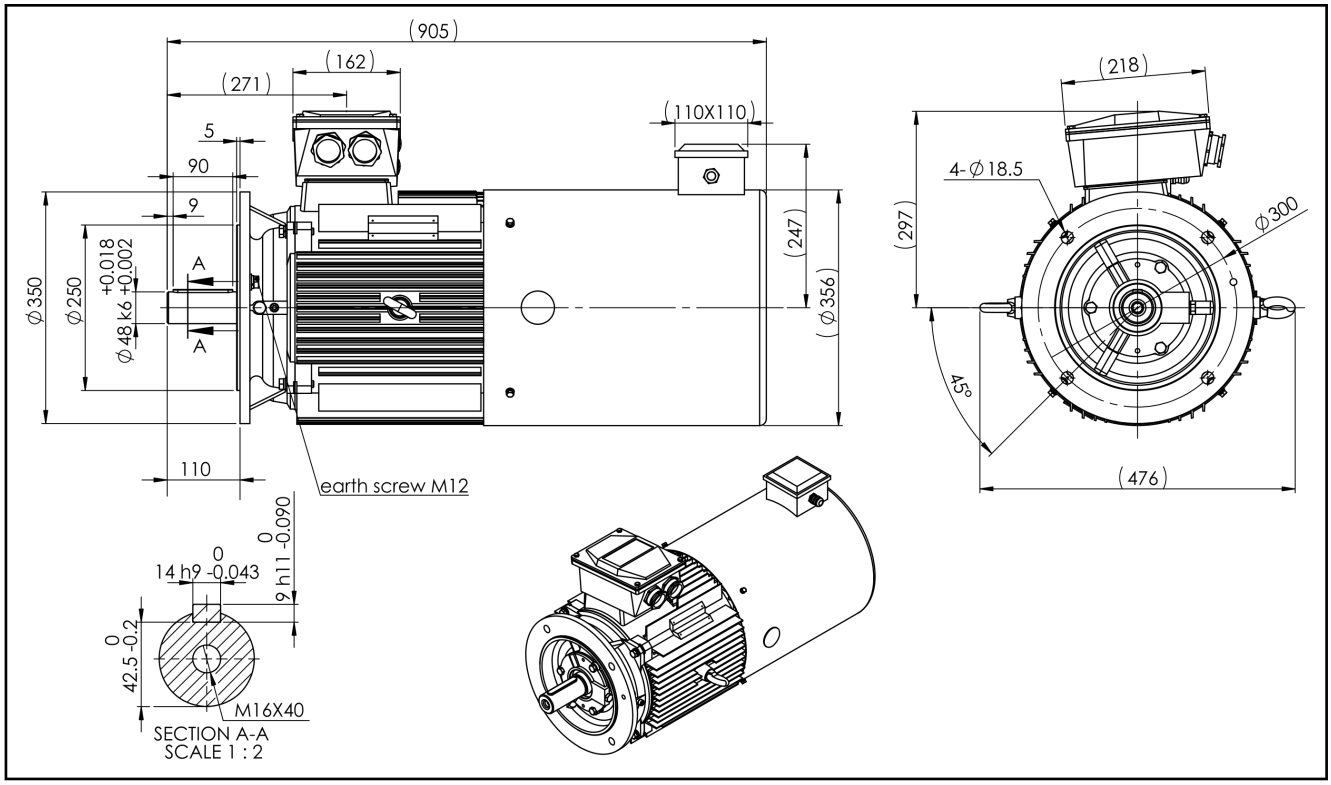

*Fig. 4-24: Specifications MOT-FC-EV2-*BV-180M-4-5CB-**18,5**-C3T-HOY*

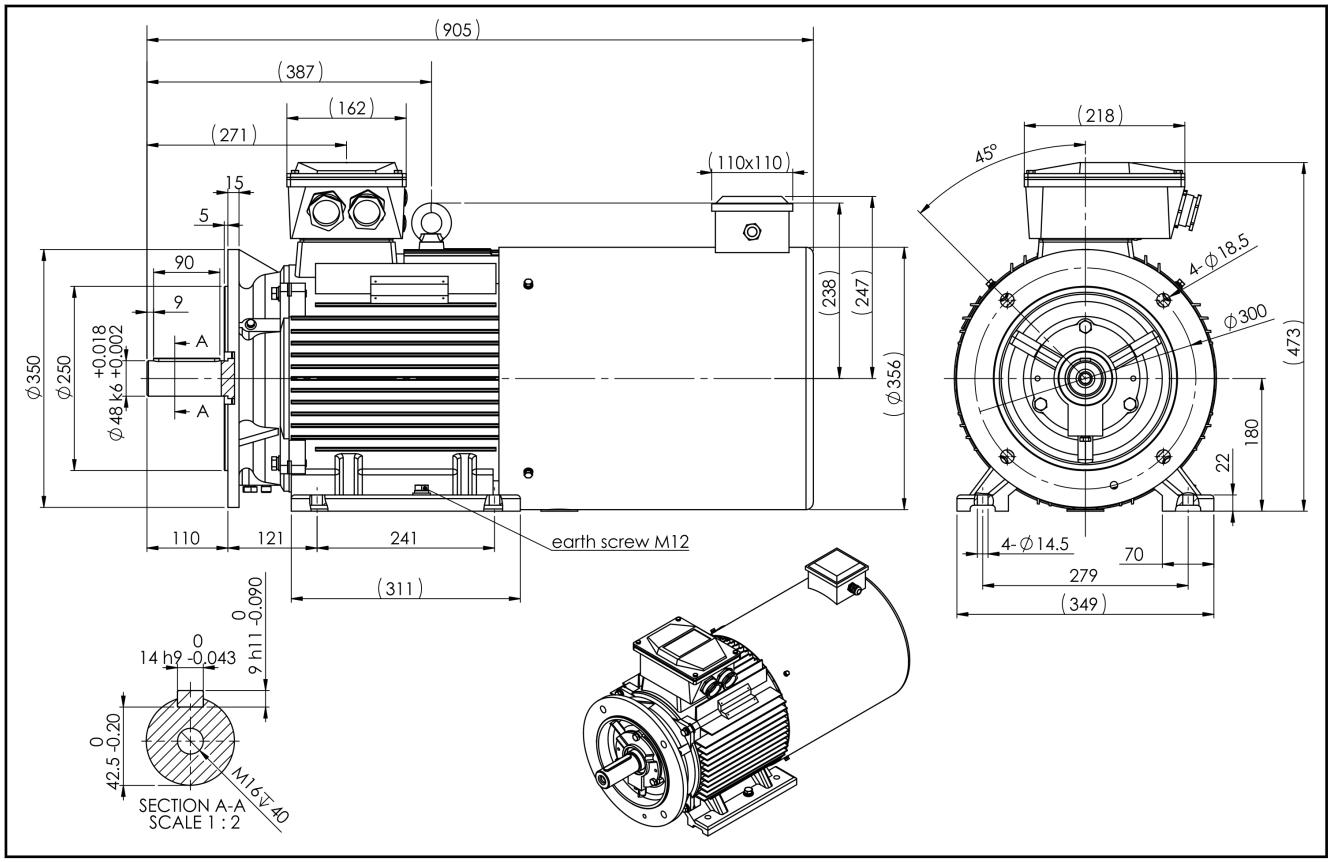

*Fig. 4-25: Specifications MOT-FC-EV2-B35-180M-4-5CB-**18,5**-C3T-HOY*

4.13 Technical Data Frame Size 180L / 22 kW

4.13.1 Data Sheet

Designation	Symbol	Unit	MOT-FC 180L / 22 kW
Rated power	P_N	kW	22.00
Rated torque	M_N	Nm	143.0
Rated current	I_N	A	41.0
Rated frequency	f_N	Hz	50.0
Rated voltage	U_N	V	400
Winding interconnection	-	-	D
Rated speed	n_N	min^{-1}	1,470
Performance factor	cosφ	-	0.86
Efficiency at 100%-load	η_{100}	-	0.90
Efficiency at 75%-load	η_{75}	-	0.92
Efficiency at 50%-load	η_{50}	-	0.90
Maximum torque	M_{max}	Nm	329.0
Maximum current	I_{max}	A	102.5
Maximum velocity	n_{max}	min^{-1}	3,800
Mechanical parameters			
Number of pole pairs	o	-	2
Bearing A-side	-	-	6311-ZZ/C3
Bearing B-side	-	-	6311-ZZ/C3
Moment of inertia of the rotor	J_{rot}	kg * m²	0.1730000
Mass	m_{mot}	kg	215.0
Sound pressure level	L_P	dB[A]	66
Cable gland at terminal box	-	mm	M40 x 1.5 (2x)
Terminal board bolts	-	mm	M6
Ø-clamping range of connection clamps	-	mm	19 ... 28
			Latest amendment: 2014-07-31

Tab. 4-12: Technical Data Frame Size 180L / 22 kW

Technical Data

4.13.2 Frame Size 180L / 22 kW Specifications

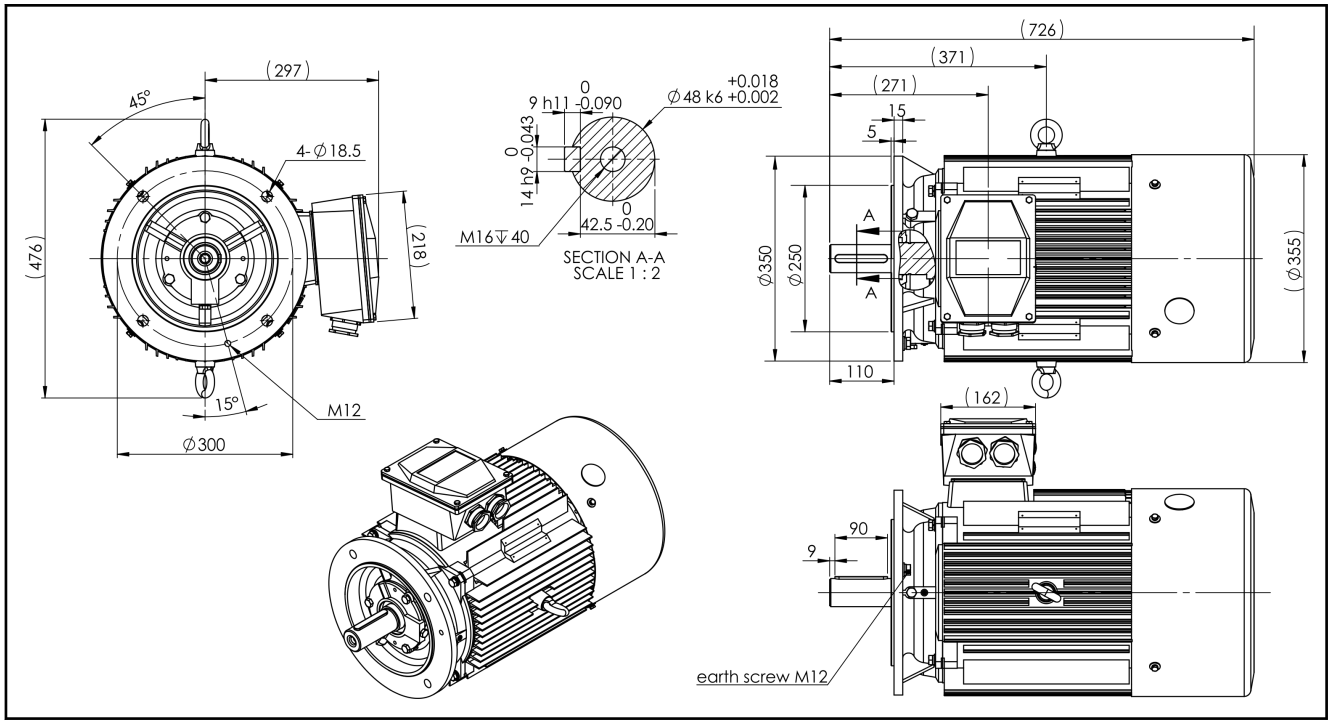

*Fig. 4-26: Specifications MOT-FC-ET2-*BV-180L-4-5CB-**0022**-C3T-HOY*

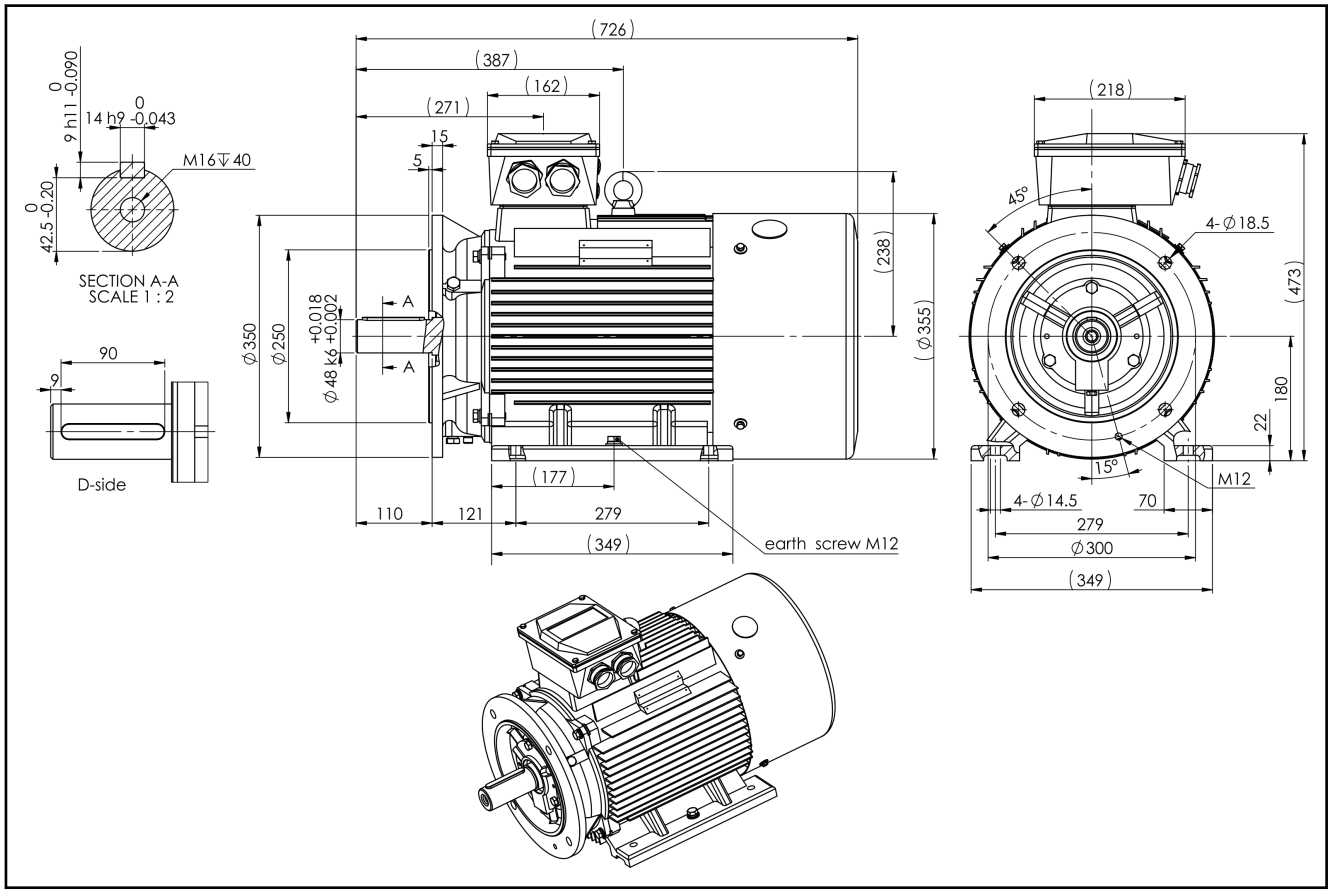

*Fig. 4-27: Specifications MOT-FC-ET2-B35-180L-4-5CB-**0022**-C3T-HOY*

Technical Data

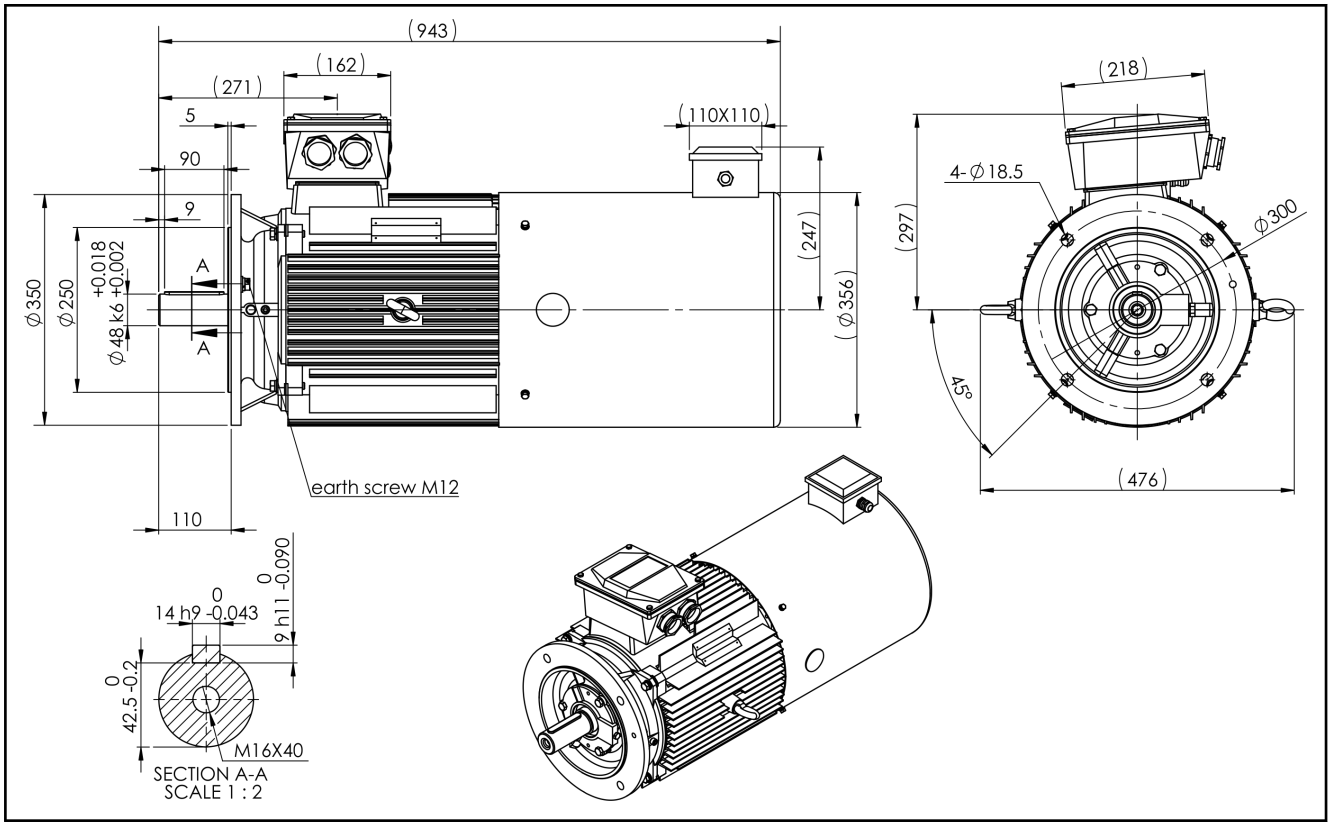

*Fig. 4-28: Specifications MOT-FC-EV2-*BV-180L-4-5CB-**0022**-C3T-HOY*

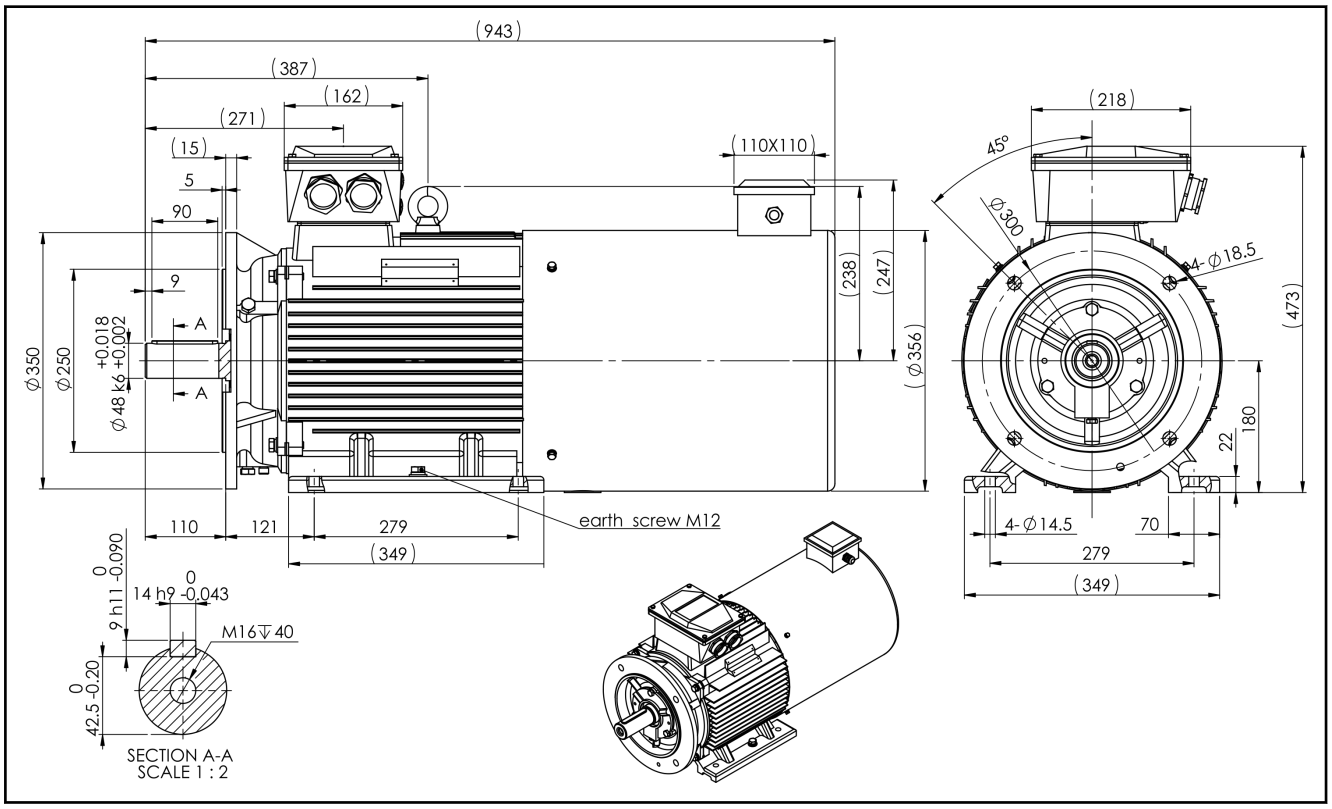

*Fig. 4-29: Specifications MOT-FC-EV2-B35-180L-4-5CB-**0022**-C3T-HOY*

4.14 Technical Data Frame Size 200L / 30 kW

4.14.1 Data Sheet

Designation	Symbol	Unit	MOT-FC 200L / 30 kW
Rated power	P_N	kW	30.00
Rated torque	M_N	Nm	194.0
Rated current	I_N	A	55.0
Rated frequency	f_N	Hz	50.0
Rated voltage	U_N	V	400
Winding interconnection	-	-	D
Rated speed	n_N	min^{-1}	1,470
Performance factor	cosφ	-	0.86
Efficiency at 100%-load	η_{100}	-	0.92
Efficiency at 75%-load	η_{75}	-	0.92
Efficiency at 50%-load	η_{50}	-	0.91
Maximum torque	M_{max}	Nm	446.0
Maximum current	I_{max}	A	137.5
Maximum velocity	n_{max}	min^{-1}	3,800
Mechanical parameters			
Number of pole pairs	o	-	2
Bearing A-side	-	-	6312/C3
Bearing B-side	-	-	6312/C3 CIB
Moment of inertia of the rotor	J_{rot}	kg * m²	0.2820000
Mass	m_{mot}	kg	243.0
Sound pressure level	L_P	dB[A]	68
Cable gland at terminal box	-	mm	M50 x 1.5 (2x)
Terminal board bolts	-	mm	M8
Ø-clamping range of connection clamps	-	mm	32 ... 38
			Latest amendment: 2014-07-31

Tab. 4-13: Technical Data Frame Size 200L / 30 kW

4.14.2 Frame Size 200L / 30 kW Specifications

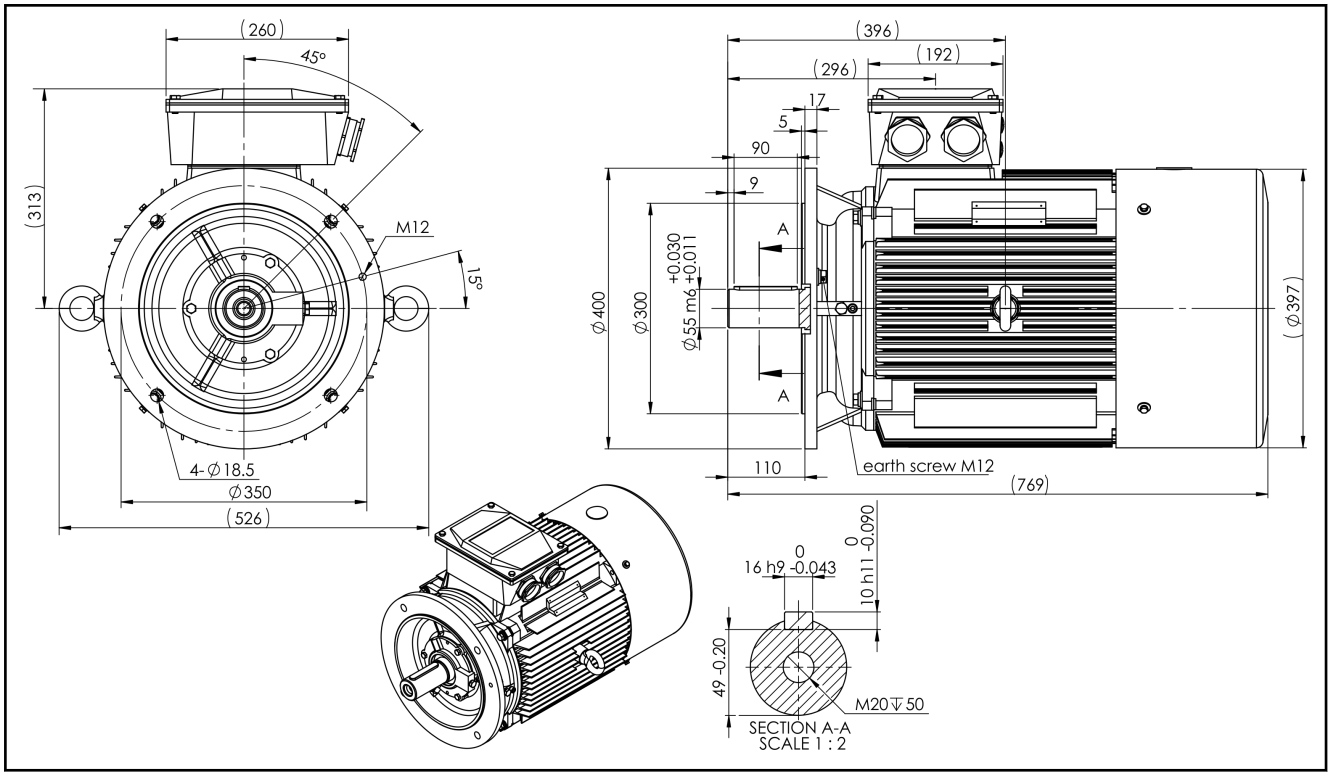

*Fig. 4-30: Specifications MOT-FC-ET2-*BV-200L-4-5CB-**0030**-C3T-HOY*

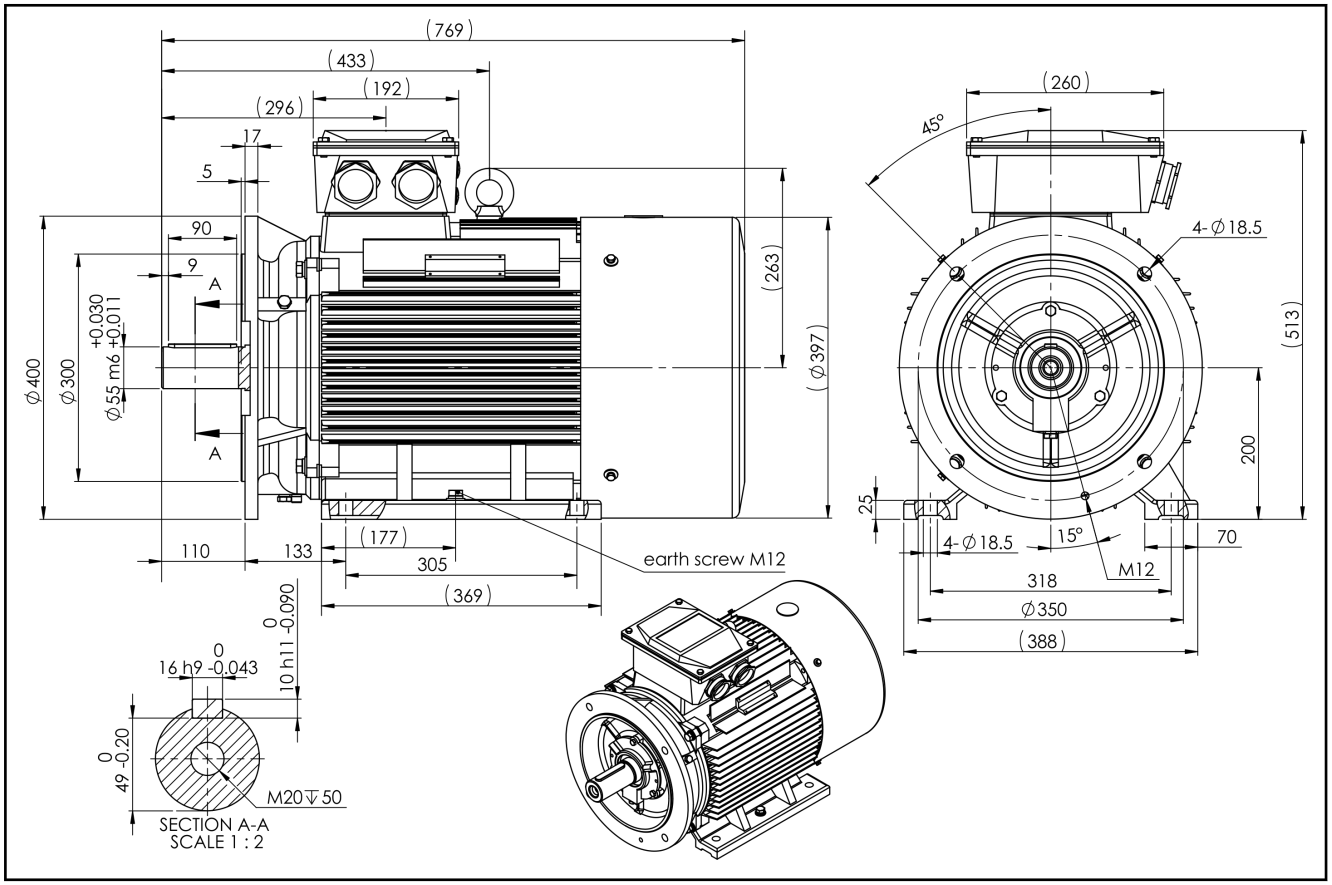

*Fig. 4-31: Specifications MOT-FC-ET2-B35-200L-4-5CB-**0030**-C3T-HOY*

Technical Data

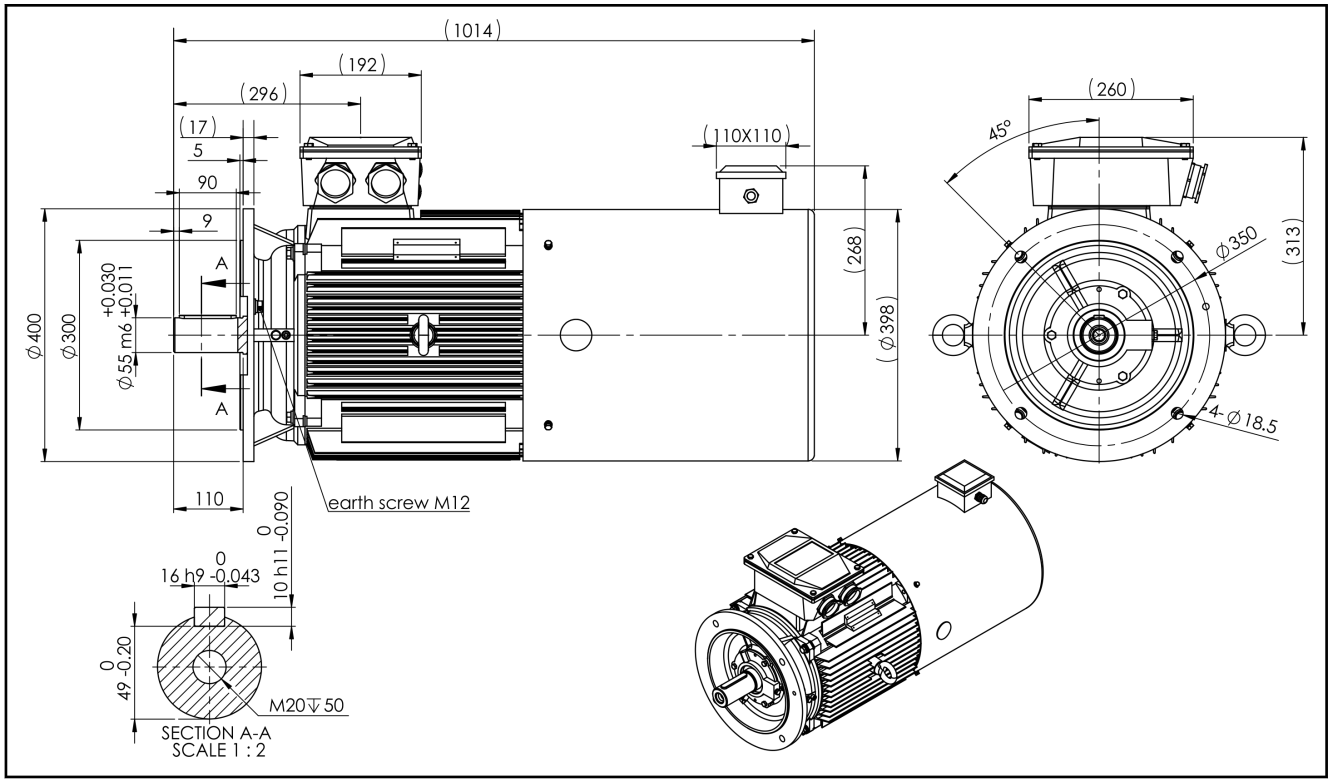

*Fig. 4-32: Specifications MOT-FC-EV2-*BV-200L-4-5CB-**0030**-C3T-HOY*

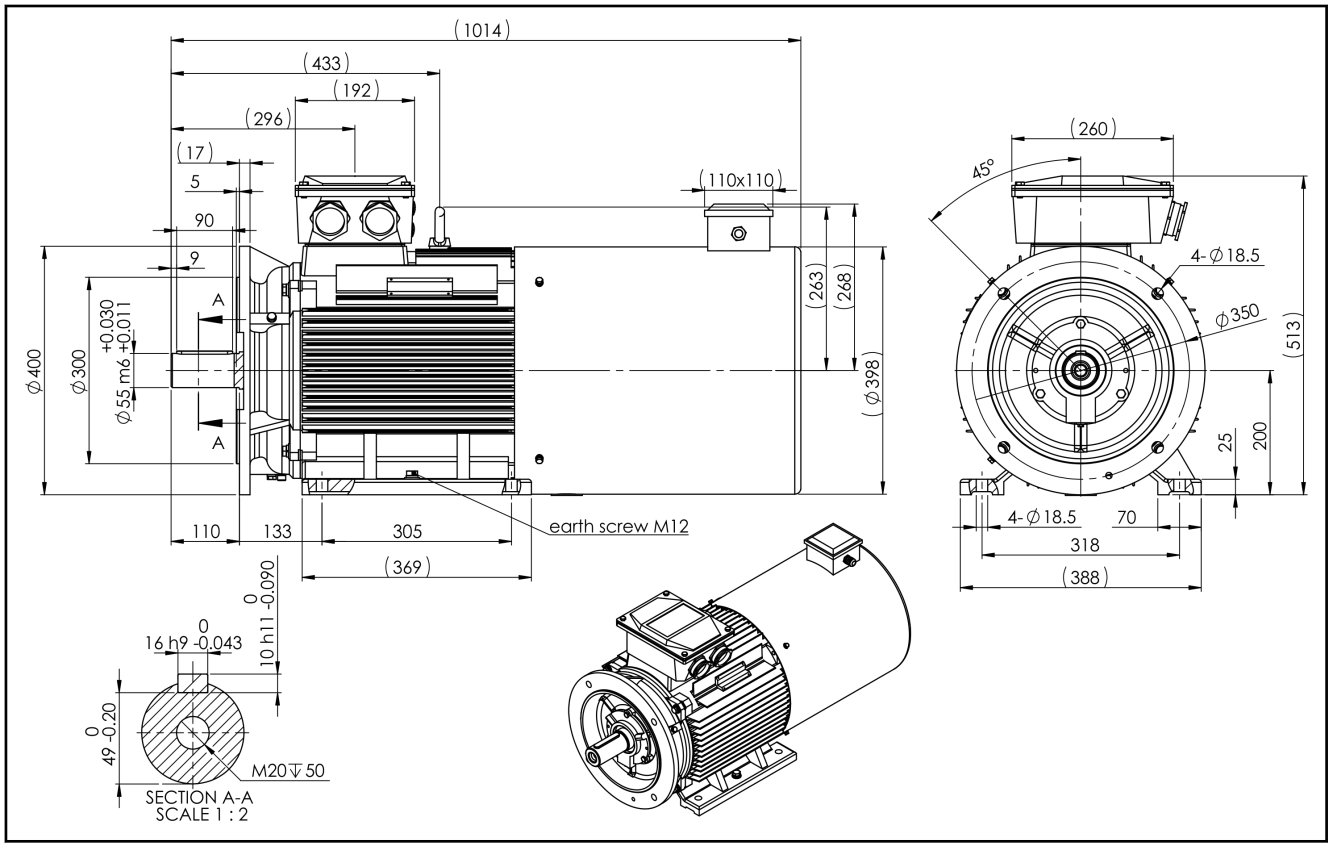

*Fig. 4-33: Specifications MOT-FC-EV2-B35-200L-4-5CB-**0030**-C3T-HOY*

4.15 Technical Data Frame Size 225S / 37 kW

4.15.1 Data Sheet

Designation	Symbol	Unit	MOT-FC 225S / 37 kW
Rated power	P_N	kW	37.00
Rated torque	M_N	Nm	238.0
Rated current	I_N	A	67.0
Rated frequency	f_N	Hz	50.0
Rated voltage	U_N	V	400
Winding interconnection	-	-	D
Rated speed	n_N	min^{-1}	1,475
Performance factor	cosφ	-	0.86
Efficiency at 100%-load	η_{100}	-	0.93
Efficiency at 75%-load	η_{75}	-	0.93
Efficiency at 50%-load	η_{50}	-	0.92
Maximum torque	M_{max}	Nm	547.0
Maximum current	I_{max}	A	167.5
Maximum velocity	n_{max}	min^{-1}	2,800
Mechanical parameters -			
Number of pole pairs	o	-	2
Bearing A-side	-	-	6313/C3
Bearing B-side	-	-	6312/C3 CIB
Moment of inertia of the rotor	J_{rot}	kg * m²	0.4830000
Mass	m_{mot}	kg	305.0
Sound pressure level	L_P	dB[A]	68
Cable gland at terminal box	-	mm	M50 x 1.5 (2x)
Terminal board bolts	-	mm	M8
Ø-clamping range of connection clamps	-	mm	32 ... 38
			Latest amendment: 2014-07-31

Tab. 4-14: Technical Data Frame Size 225S / 37 kW

Technical Data

4.15.2 Frame Size 225S / 37 kW Specifications

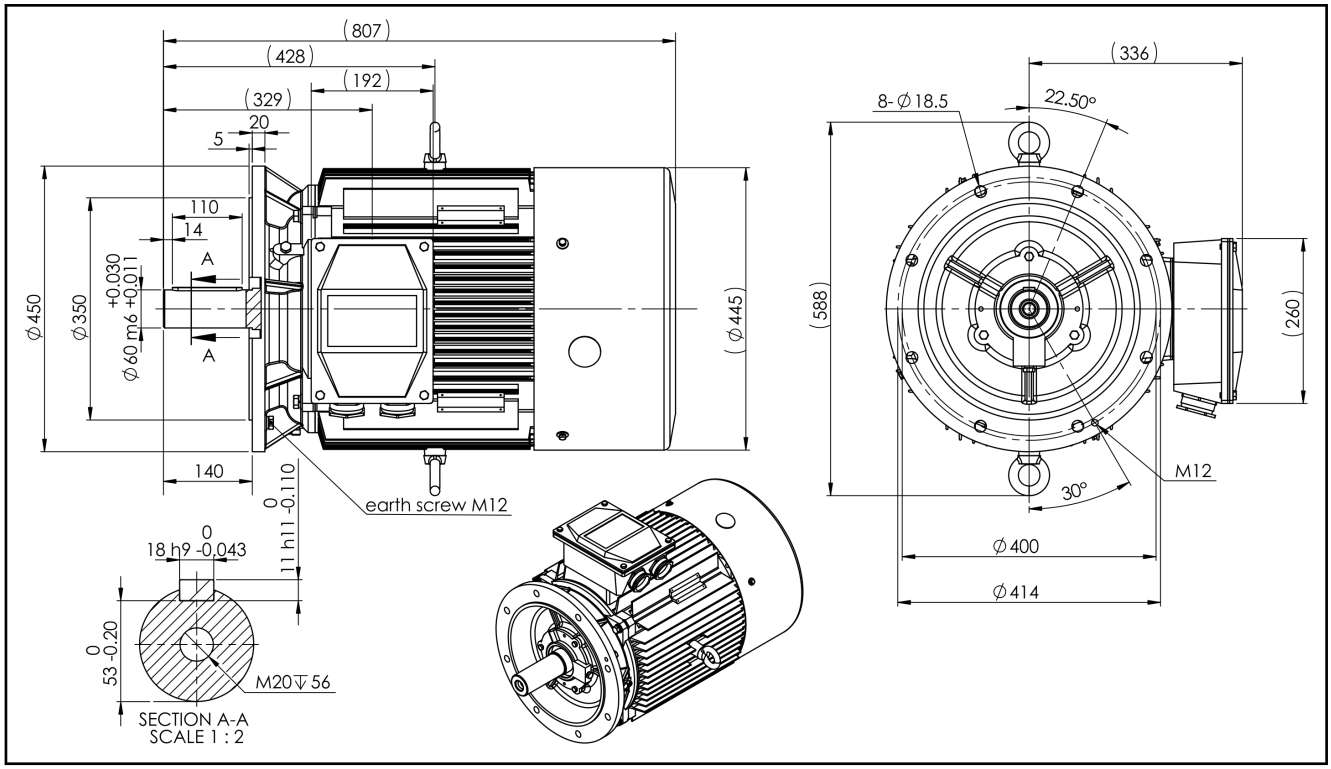

*Fig. 4-34: Specifications MOT-FC-ET2-*BV-225S-4-5CB-**0037**-C3T-HOY*

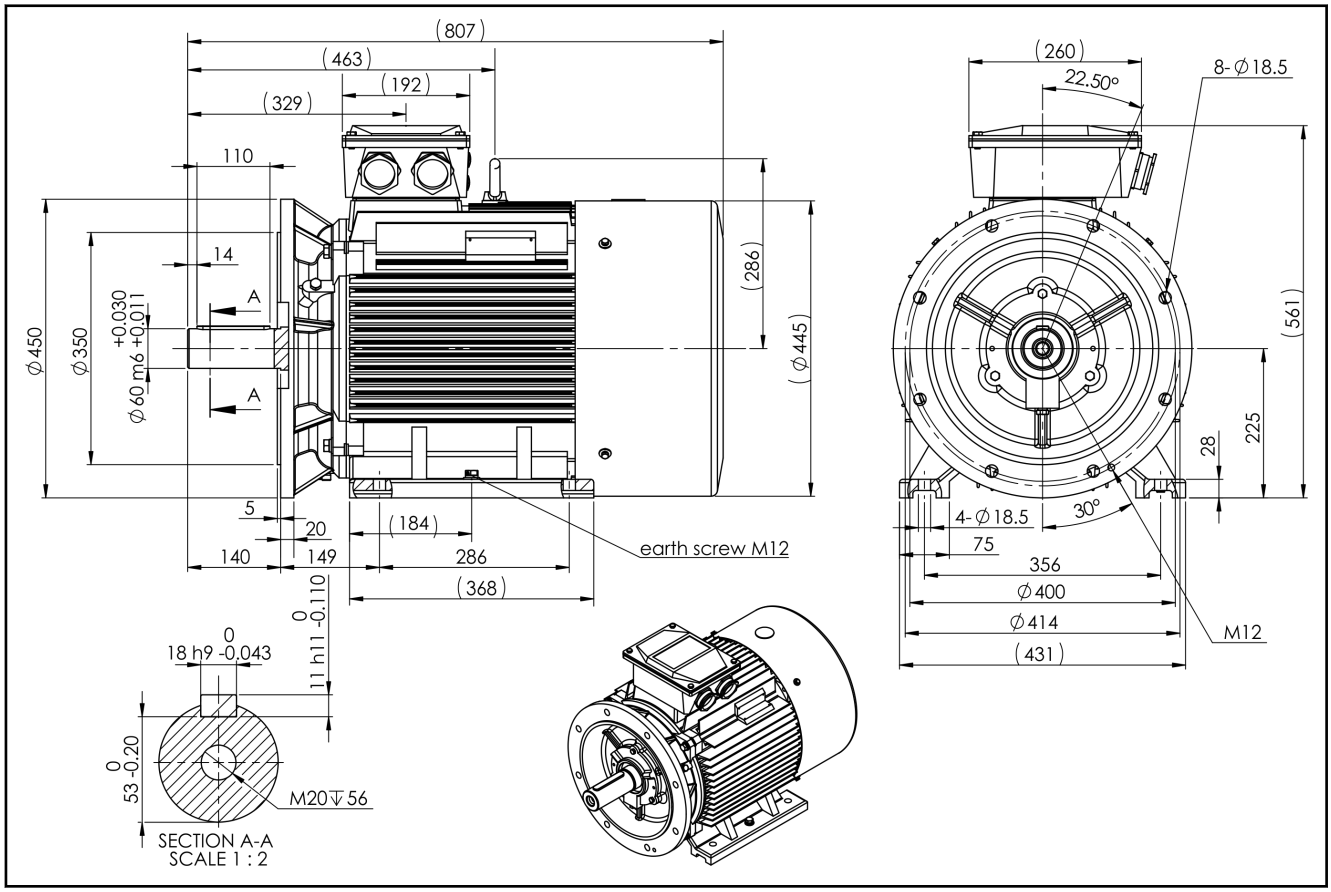

*Fig. 4-35: Specifications MOT-FC-ET2-B35-225S-4-5CB-**0037**-C3T-HOY*

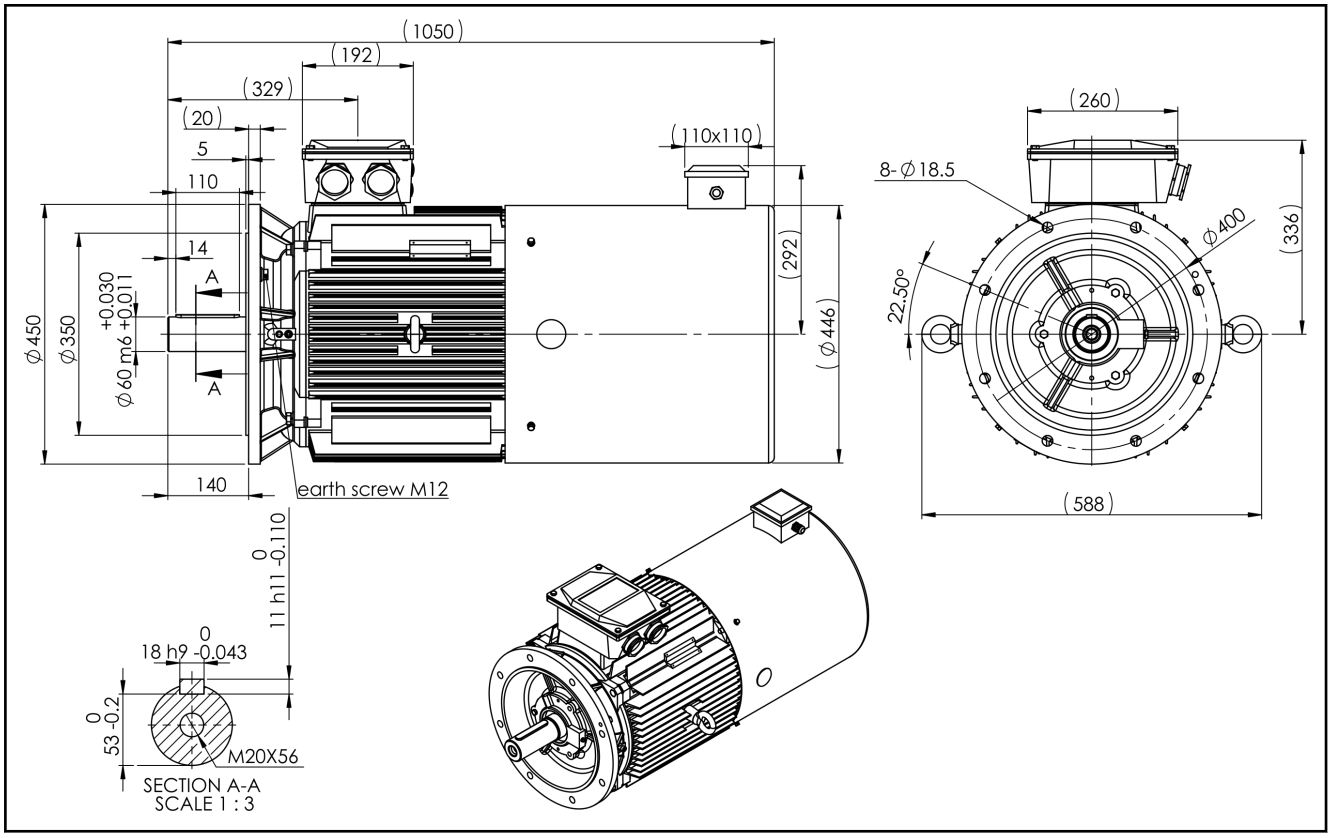

*Fig. 4-36: Specifications MOT-FC-EV2-*BV-225S-4-5CB-**0037**-C3T-HOY*

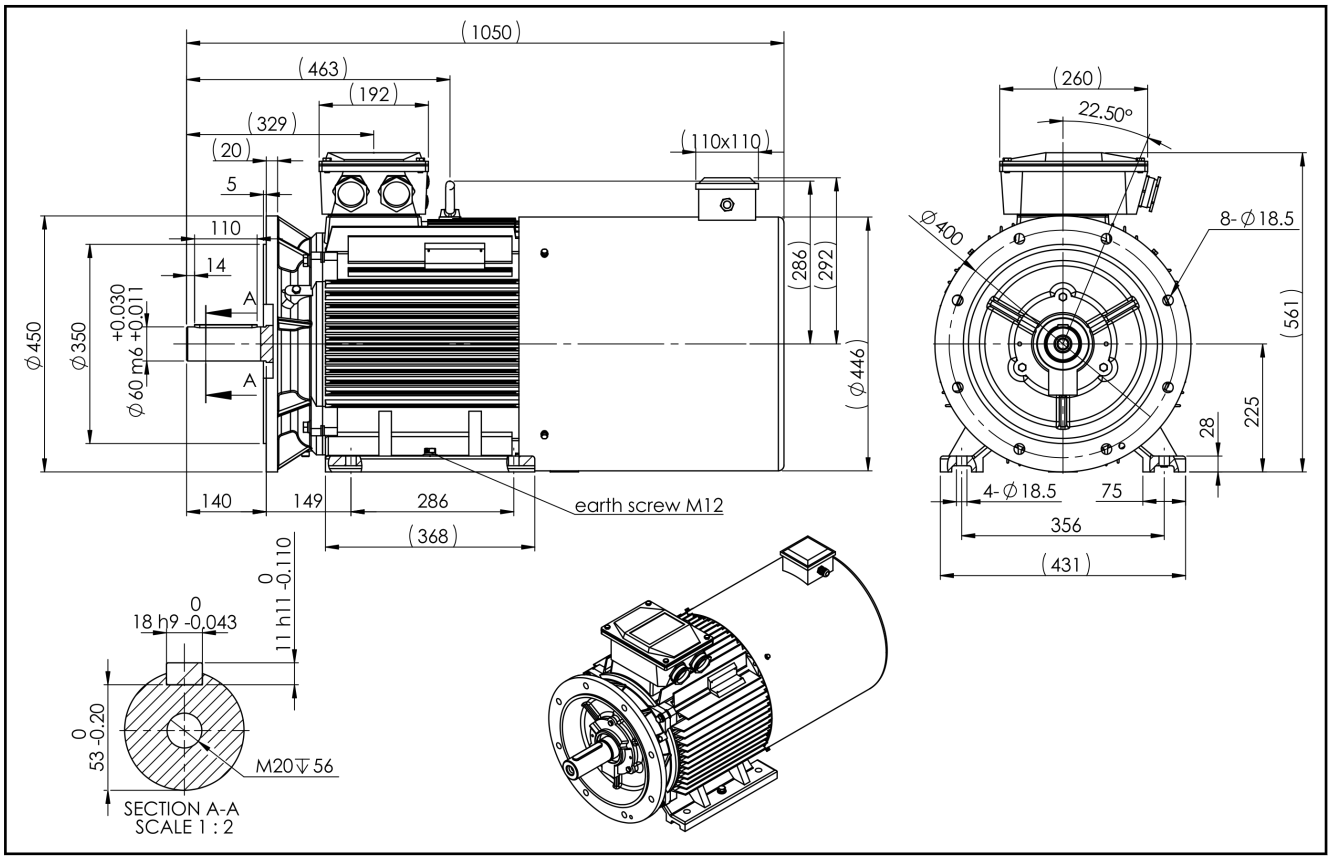

*Fig. 4-37: Specifications MOT-FC-EV2-B35-225S-4-5CB-**0037**-C3T-HOY*

4.16 Technical Data Frame Size 225M / 45 kW

4.16.1 Data Sheet

Designation	Symbol	Unit	MOT-FC 225M / 45 kW
Rated power	P_N	kW	45.00
Rated torque	M_N	Nm	290.0
Rated current	I_N	A	81.0
Rated frequency	f_N	Hz	50.0
Rated voltage	U_N	V	400
Winding interconnection	-	-	D
Rated speed	n_N	min^{-1}	1,475
Performance factor	cosφ	-	0.86
Efficiency at 100%-load	η_{100}	-	0.93
Efficiency at 75%-load	η_{75}	-	0.93
Efficiency at 50%-load	η_{50}	-	0.92
Maximum torque	M_{max}	Nm	667.0
Maximum current	I_{max}	A	202.5
Maximum velocity	n_{max}	min^{-1}	2,800
Mechanical parameters			
Number of pole pairs	o	-	2
Bearing A-side	-	-	6313/C3
Bearing B-side	-	-	6312/C3 CIB
Moment of inertia of the rotor	J_{rot}	kg * m²	0.5900000
Mass	m_{mot}	kg	328.0
Sound pressure level	L_P	dB[A]	68
Cable gland at terminal box	-	mm	M50 x 1.5 (2x)
Terminal board bolts	-	mm	M8
Ø-clamping range of connection clamps	-	mm	32 ... 38
			Latest amendment: 2014-07-31

Tab. 4-15: Technical Data Frame Size 225M / 45 kW

4.16.2 Frame Size 225M / 45 kW Specifications

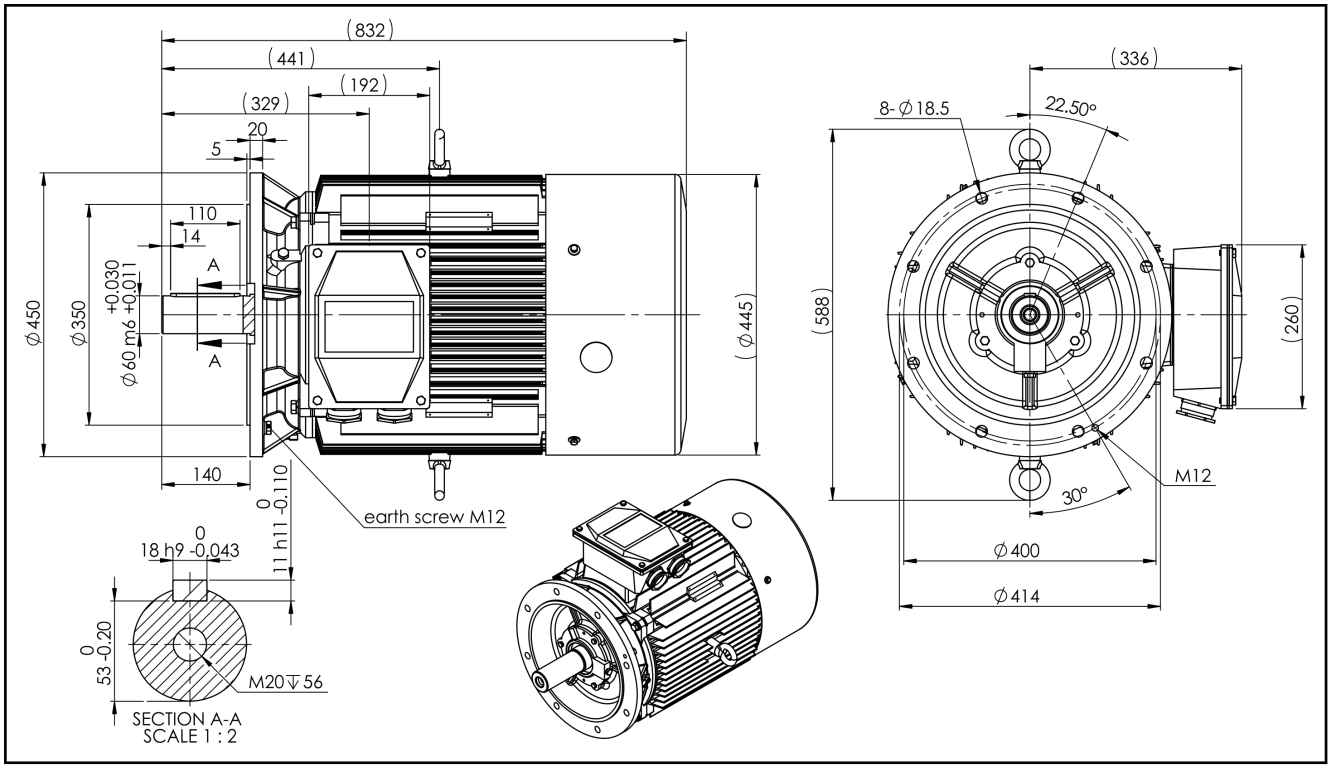

*Fig. 4-38: Specifications MOT-FC-ET2-*BV-225M-4-5CB-**0045**-C3T-HOY*

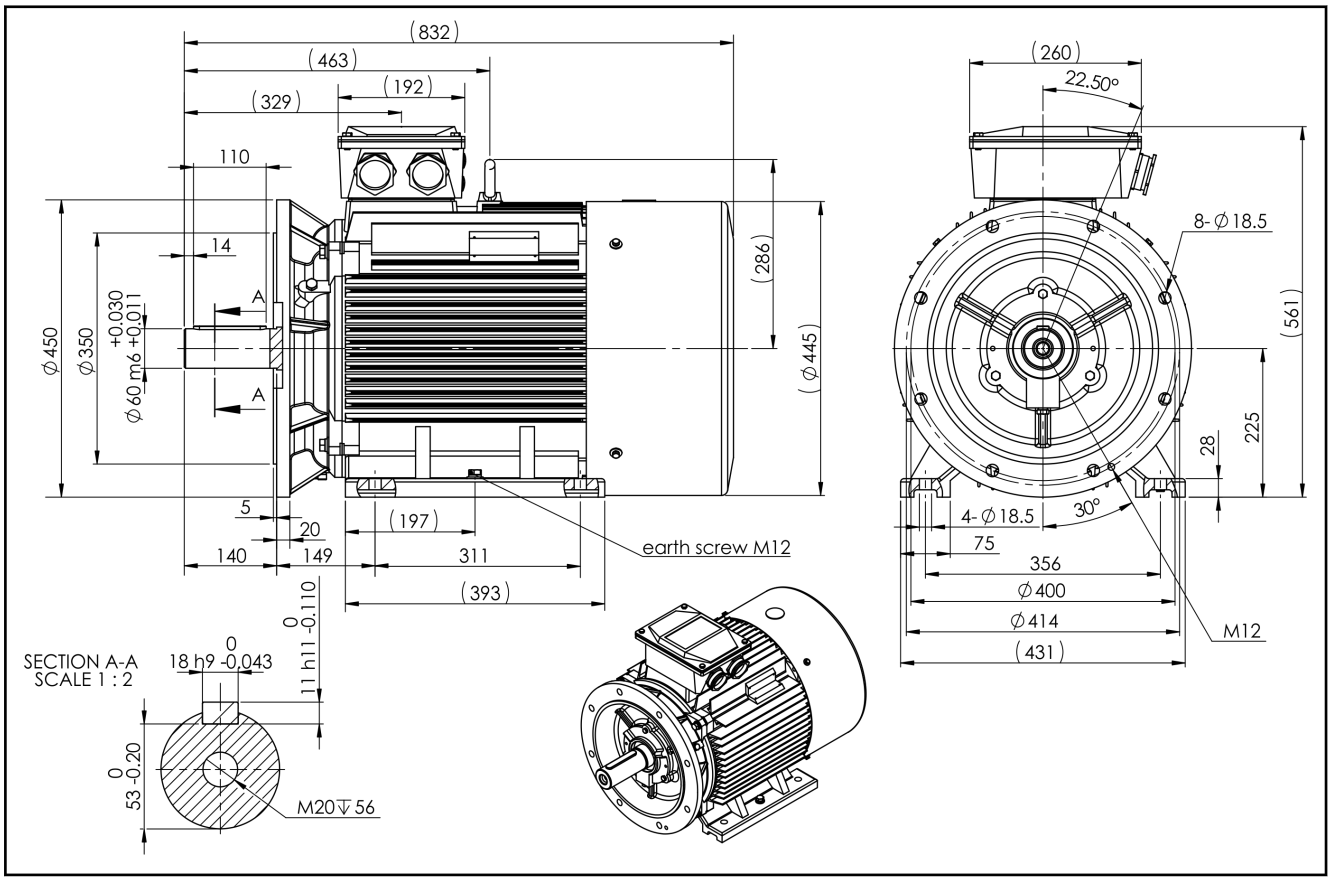

*Fig. 4-39: Specifications MOT-FC-ET2-B35-225M-4-5CB-**0045**-C3T-HOY*

Technical Data

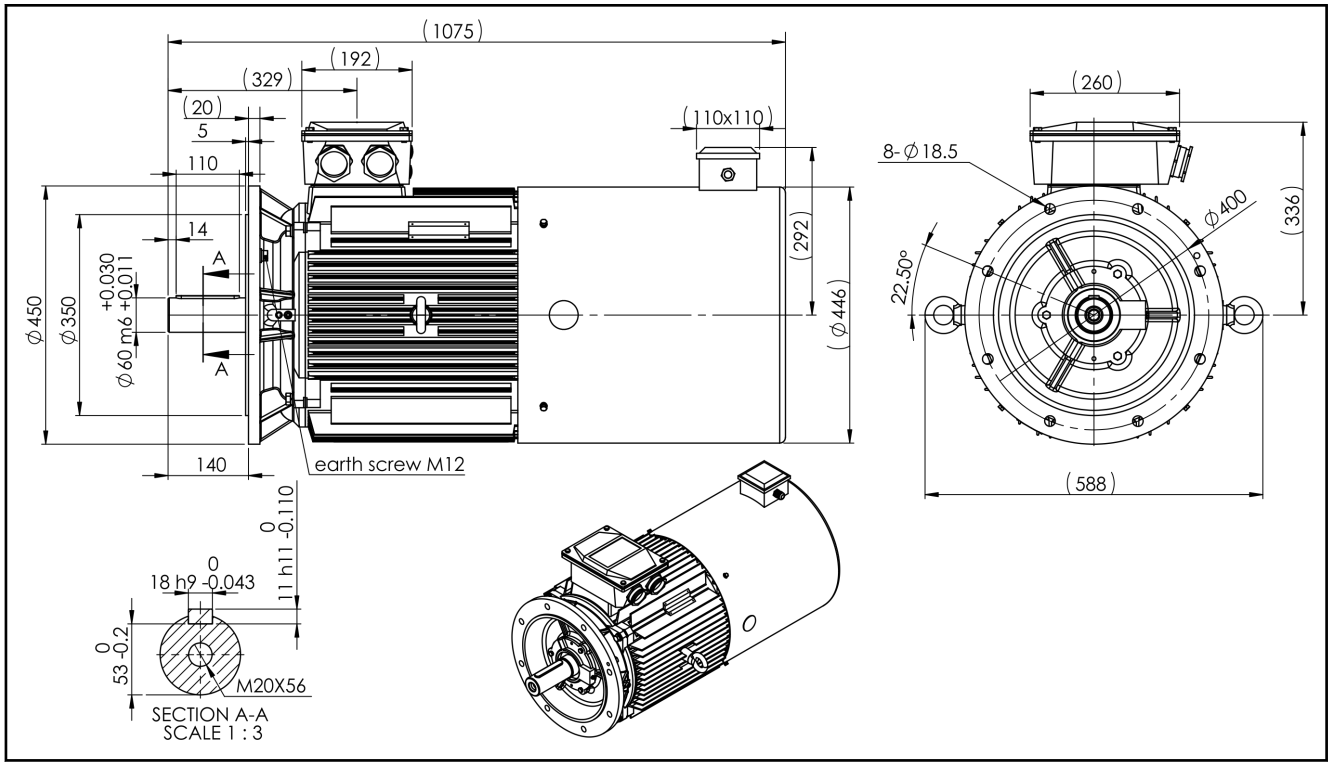

*Fig. 4-40: Specifications MOT-FC-EV2-*BV-225M-4-5CB-**0045**-C3T-HOY*

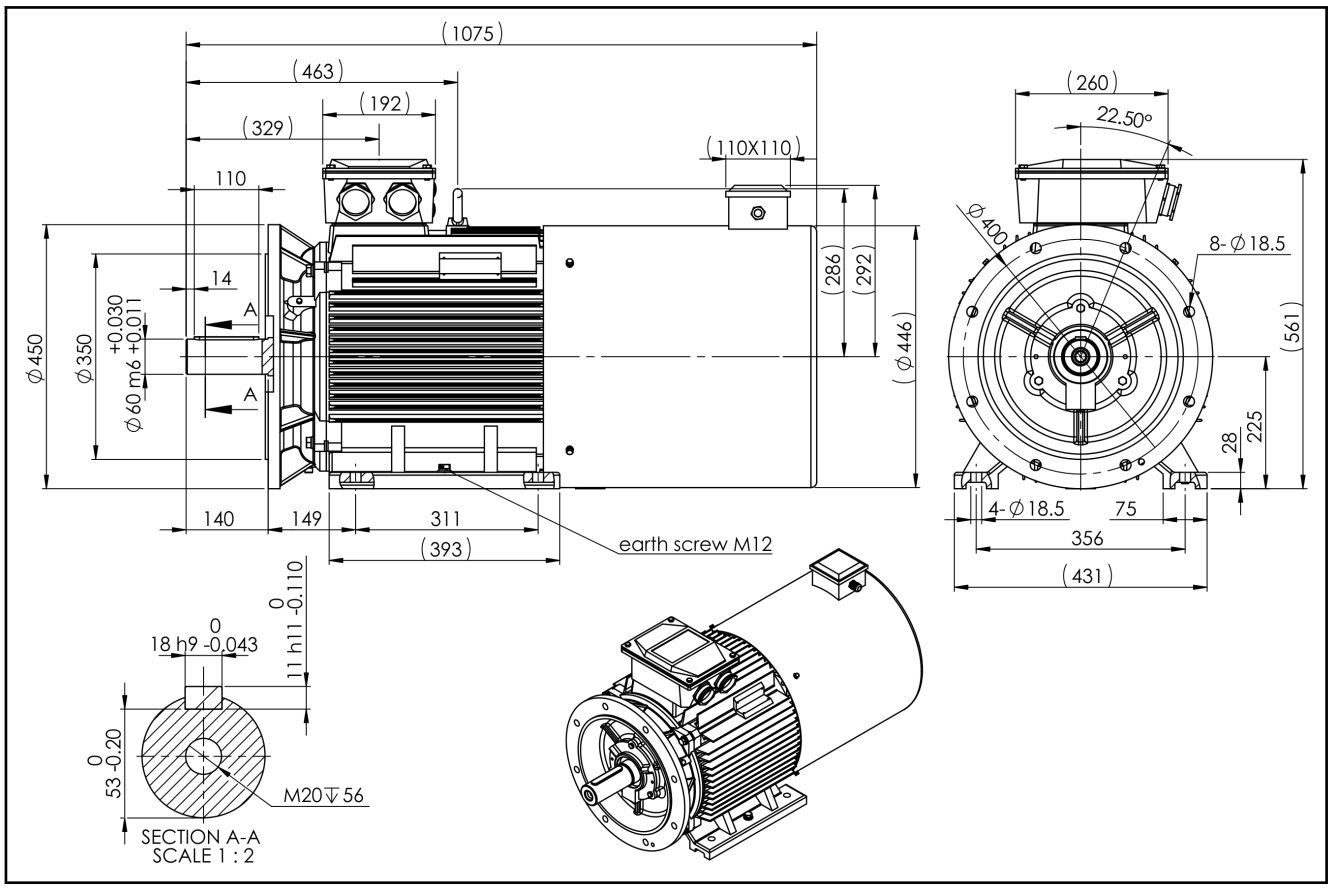

*Fig. 4-41: Specifications MOT-FC-EV2-B35-225M-4-5CB-**0045**-C3T-HOY*

4.17 Technical Data Frame Size 250M / 55 kW

4.17.1 Data Sheet

Designation	Symbol	Unit	MOT-FC 250M / 55 kW
Rated power	P_N	kW	55.00
Rated torque	M_N	Nm	354.0
Rated current	I_N	A	99.0
Rated frequency	f_N	Hz	50.0
Rated voltage	U_N	V	400
Winding interconnection	-	-	D
Rated speed	n_N	min^{-1}	1,480
Performance factor	cosφ	-	0.86
Efficiency at 100%-load	η_{100}	-	93.50
Efficiency at 75%-load	η_{75}	-	93.40
Efficiency at 50%-load	η_{50}	-	92.40
Maximum torque	M_{max}	Nm	780.0
Maximum current	I_{max}	A	247.0
Maximum velocity	n_{max}	min^{-1}	2,800
Mechanical parameters			
Number of pole pairs	o	-	2
Bearing A-side	-	-	6314/C3
Bearing B-side	-	-	6314/C3 CIB
Moment of inertia of the rotor	J_{rot}	kg * m²	0.7460000
Mass	m_{mot}	kg	452.0
Sound pressure level	L_P	dB[A]	70
Cable gland at terminal box	-	mm	M63 x 1.5 (2x)
Terminal board bolts	-	mm	M10
Ø-clamping range of connection clamps	-	mm	37 ... 44
			Latest amendment: 2014-08-05

Tab. 4-16: Technical Data Frame Size 250M / 55 kW

Technical Data

4.17.2 Frame Size 250M / 55 kW Specifications

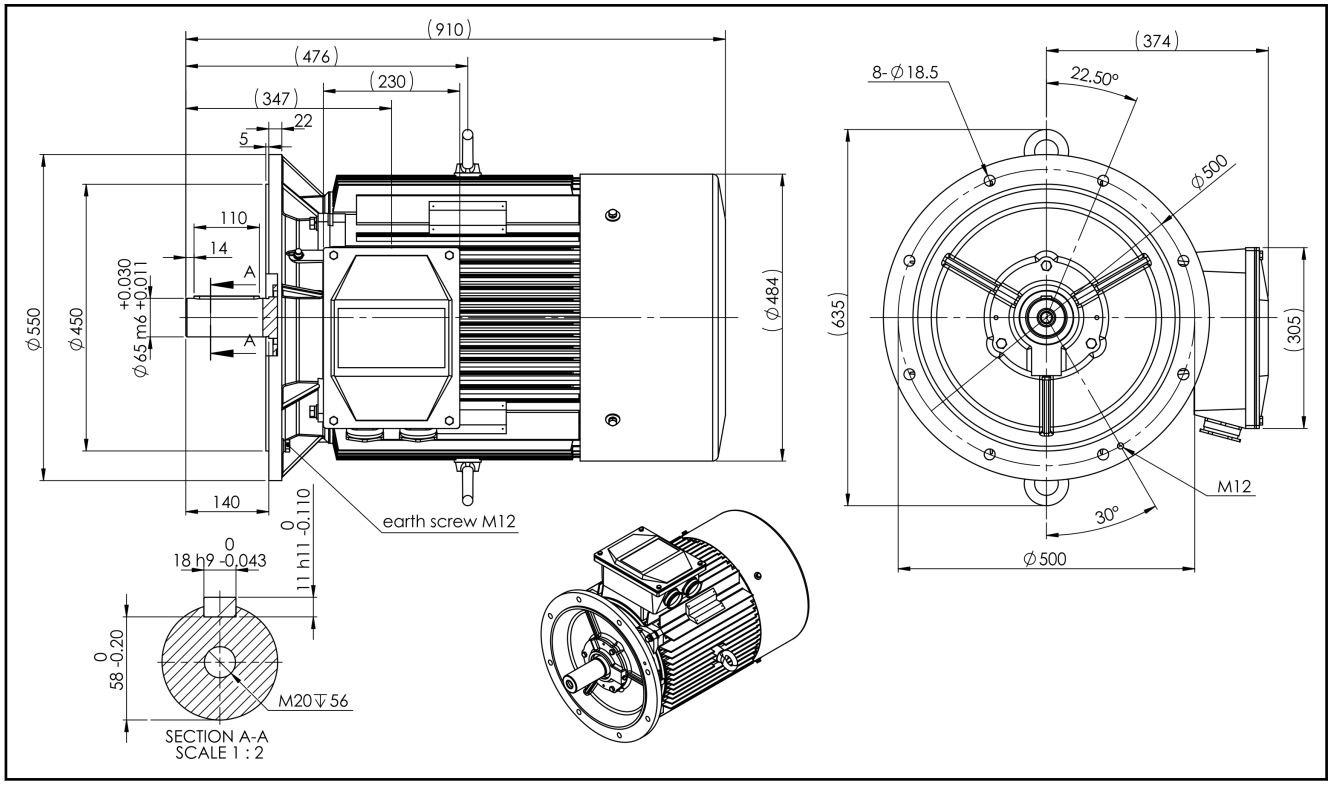

*Fig. 4-42: Specifications MOT-FC-ET2-*BV-250M-4-5CB-**0055**-C3T-HOY*

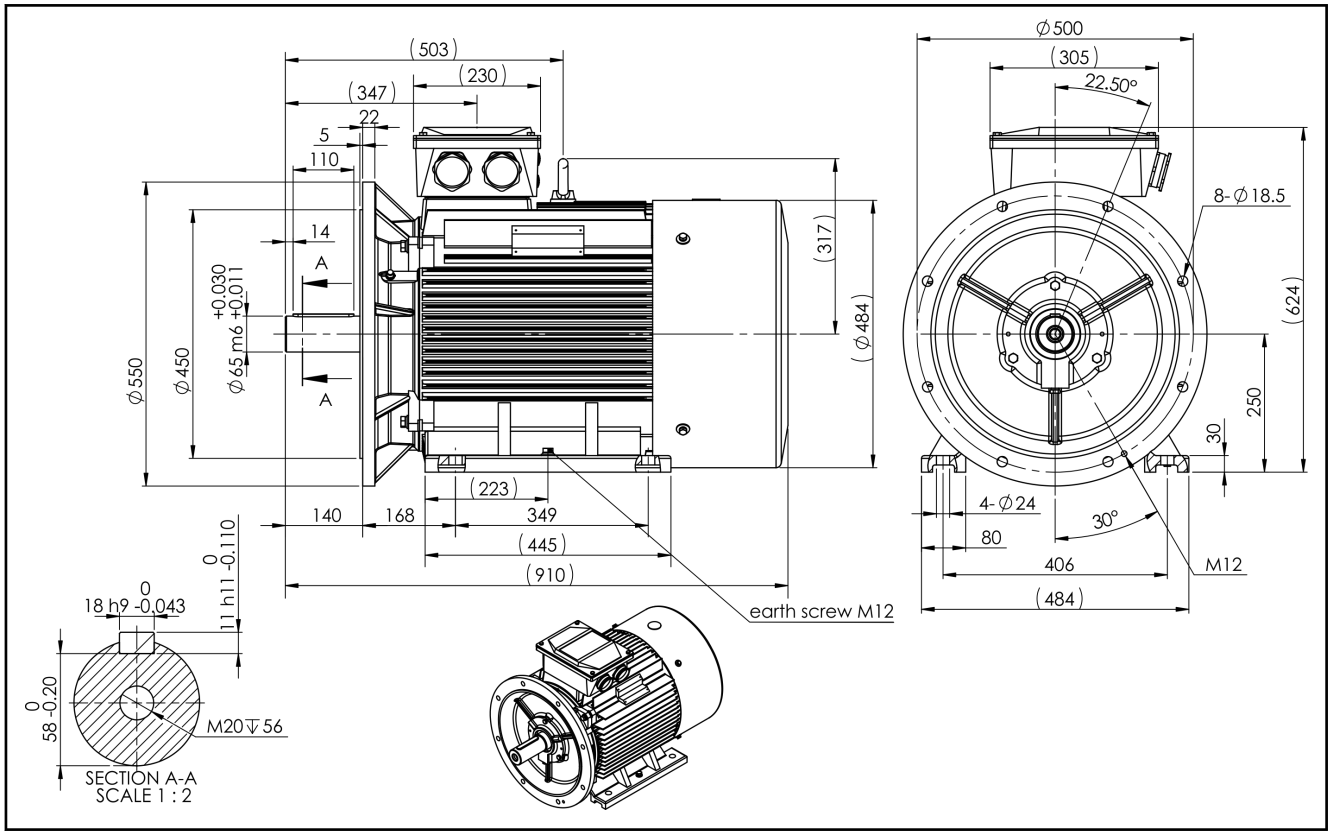

*Fig. 4-43: Specifications MOT-FC-ET2-B35-250M-4-5CB-**0055**-C3T-HOY*

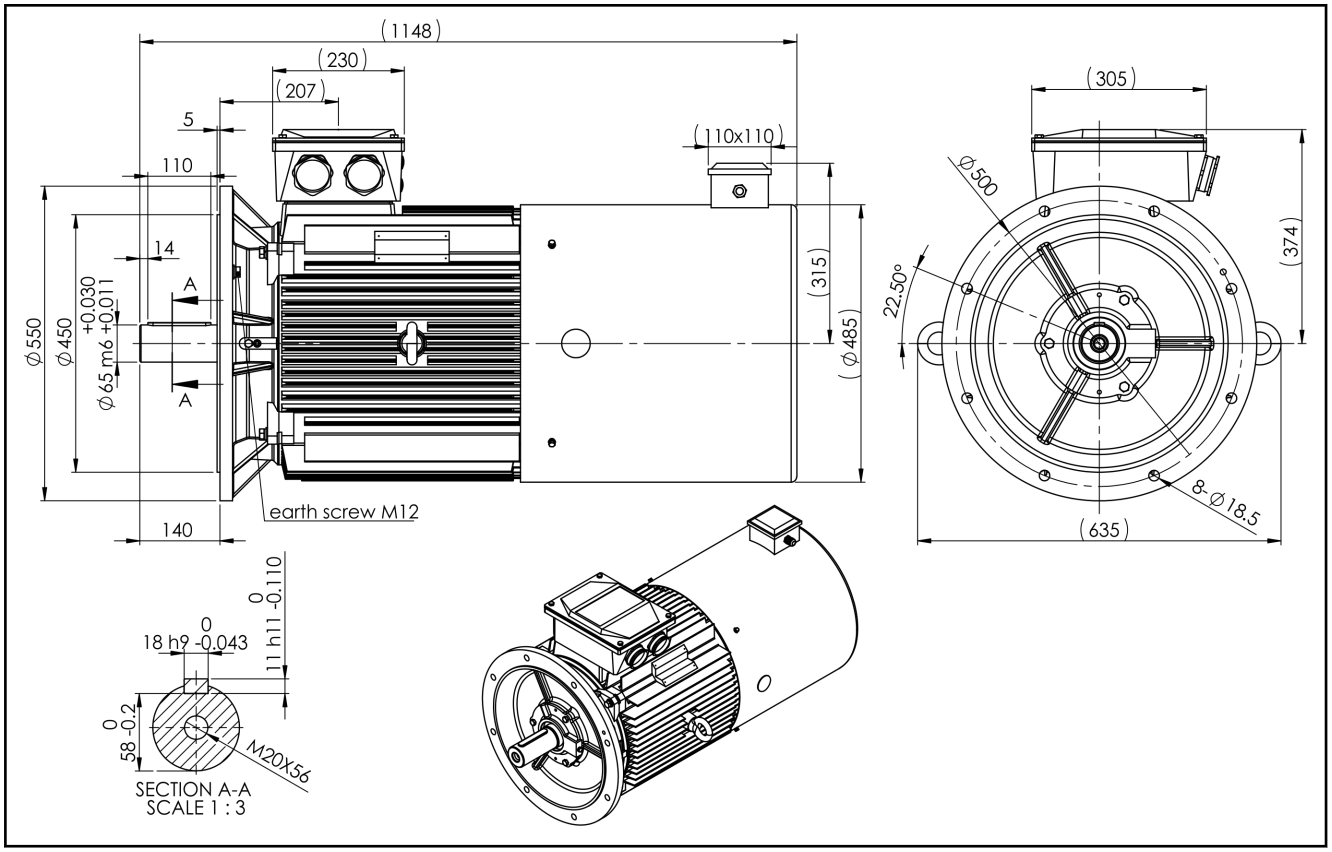

*Fig. 4-44: Specifications MOT-FC-EV2-*BV-250M-4-5CB-**0055**-C3T-HOY*

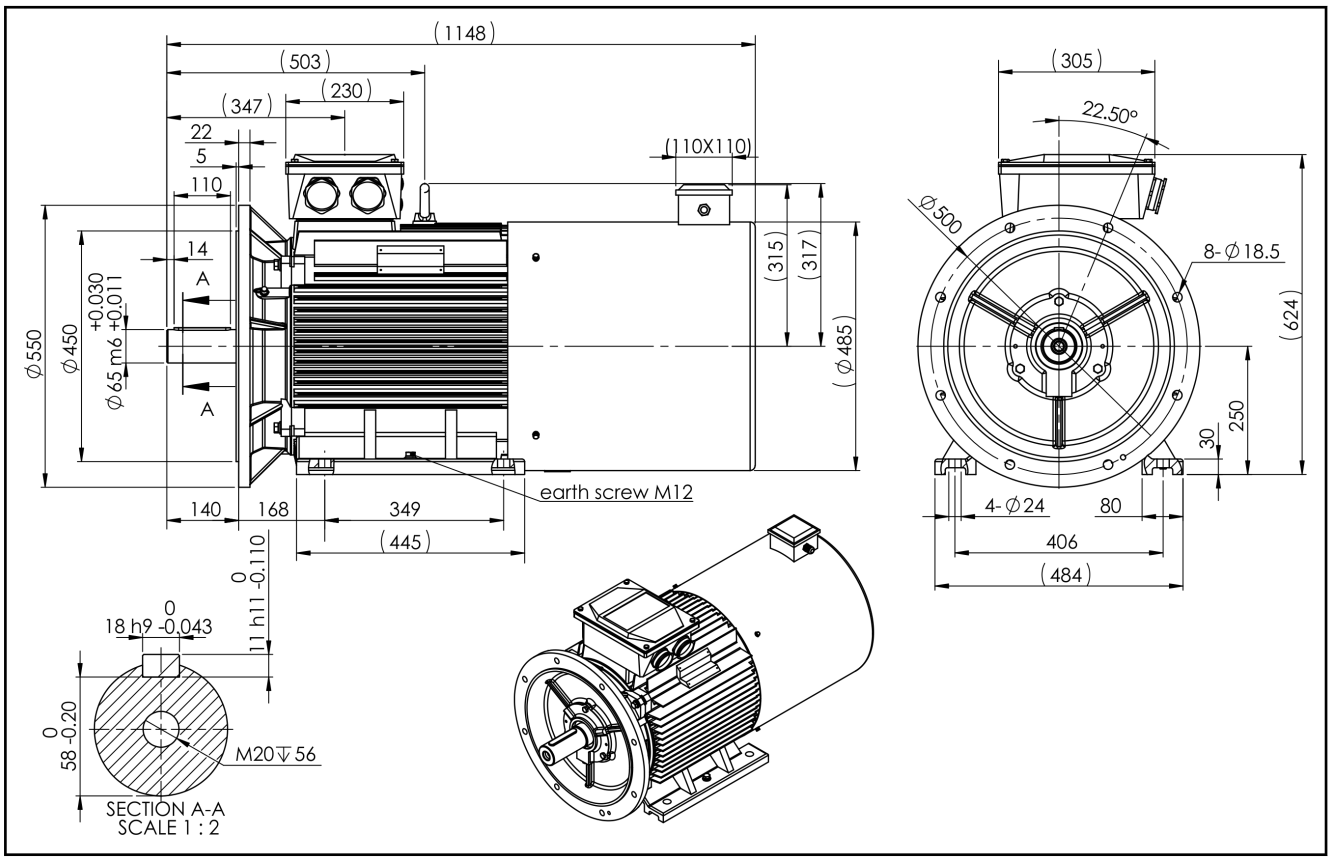

*Fig. 4-45: Specifications MOT-FC-EV2-B35-250M-4-5CB-**0055**-C3T-HOY*

4.18 Technical Data Frame Size 280S / 75 kW

4.18.1 Data Sheet

Designation	Symbol	Unit	MOT-FC 280S / 75 kW
Rated power	P_N	kW	75.00
Rated torque	M_N	Nm	483.0
Rated current	I_N	A	134.0
Rated frequency	f_N	Hz	50.0
Rated voltage	U_N	V	400
Winding interconnection	-	-	D
Rated speed	n_N	min^{-1}	1,480
Performance factor	cosφ	-	0.87
Efficiency at 100%-load	η_{100}	-	94.00
Efficiency at 75%-load	η_{75}	-	93.90
Efficiency at 50%-load	η_{50}	-	93.00
Maximum torque	M_{max}	Nm	1,060.0
Maximum current	I_{max}	A	335.0
Maximum velocity	n_{max}	min^{-1}	2,800
Mechanical parameters			
Number of pole pairs	o	-	2
Bearing A-side	-	-	6317/C3
Bearing B-side	-	-	6317/C3 CIB
Moment of inertia of the rotor	J_{rot}	kg * m²	1.2900000
Mass	m_{mot}	kg	592.0
Sound pressure level	L_P	dB[A]	72
Cable gland at terminal box	-	mm	M63 x 1.5 (2x)
Terminal board bolts	-	mm	M10
Ø-clamping range of connection clamps	-	mm	37 ... 44
			Latest amendment: 2014-08-05

Tab. 4-17: Technical Data Frame Size 280S / 75 kW

4.18.2 Frame Size 280S / 75 kW Specifications

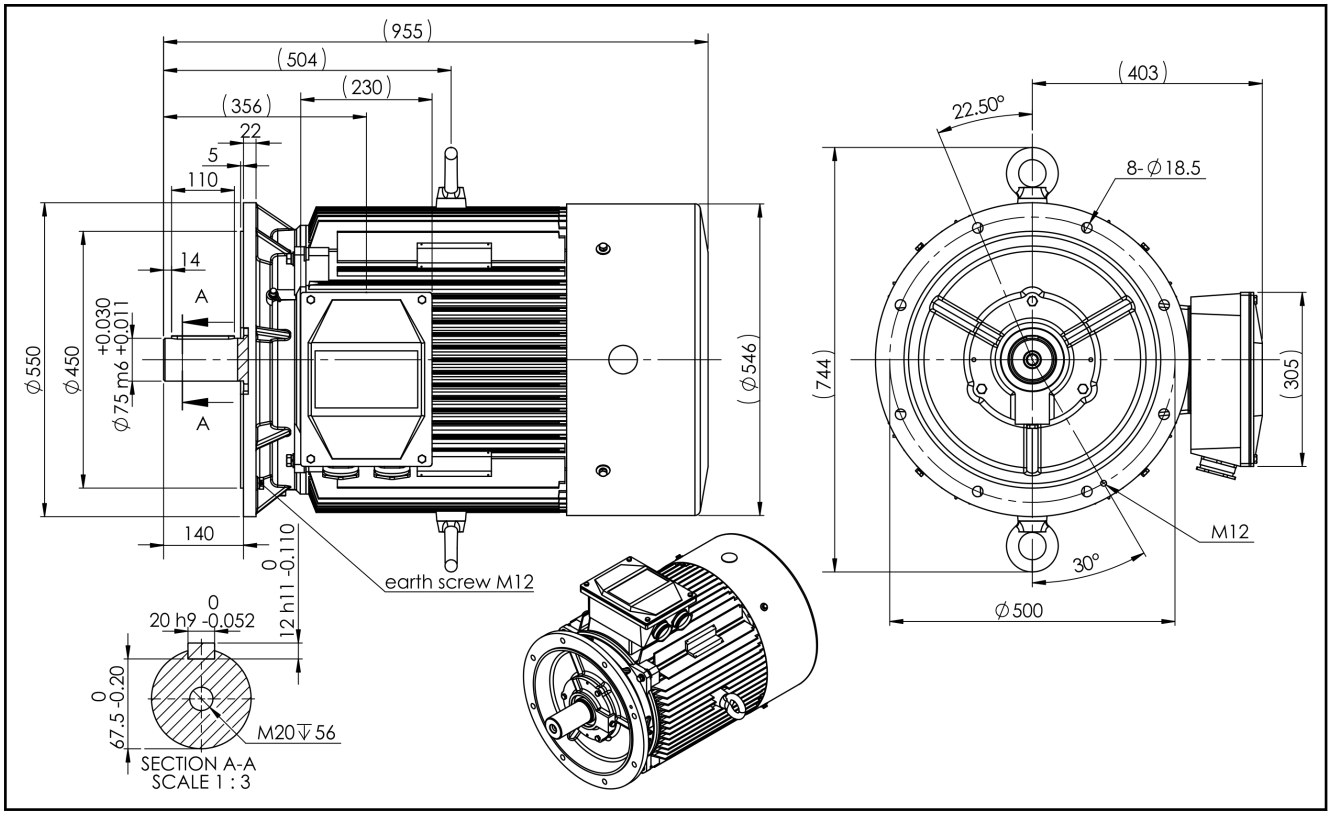

*Fig. 4-46: Specifications MOT-FC-ET2-*BV-280S-4-5CB-**0075**-C3T-HOY*

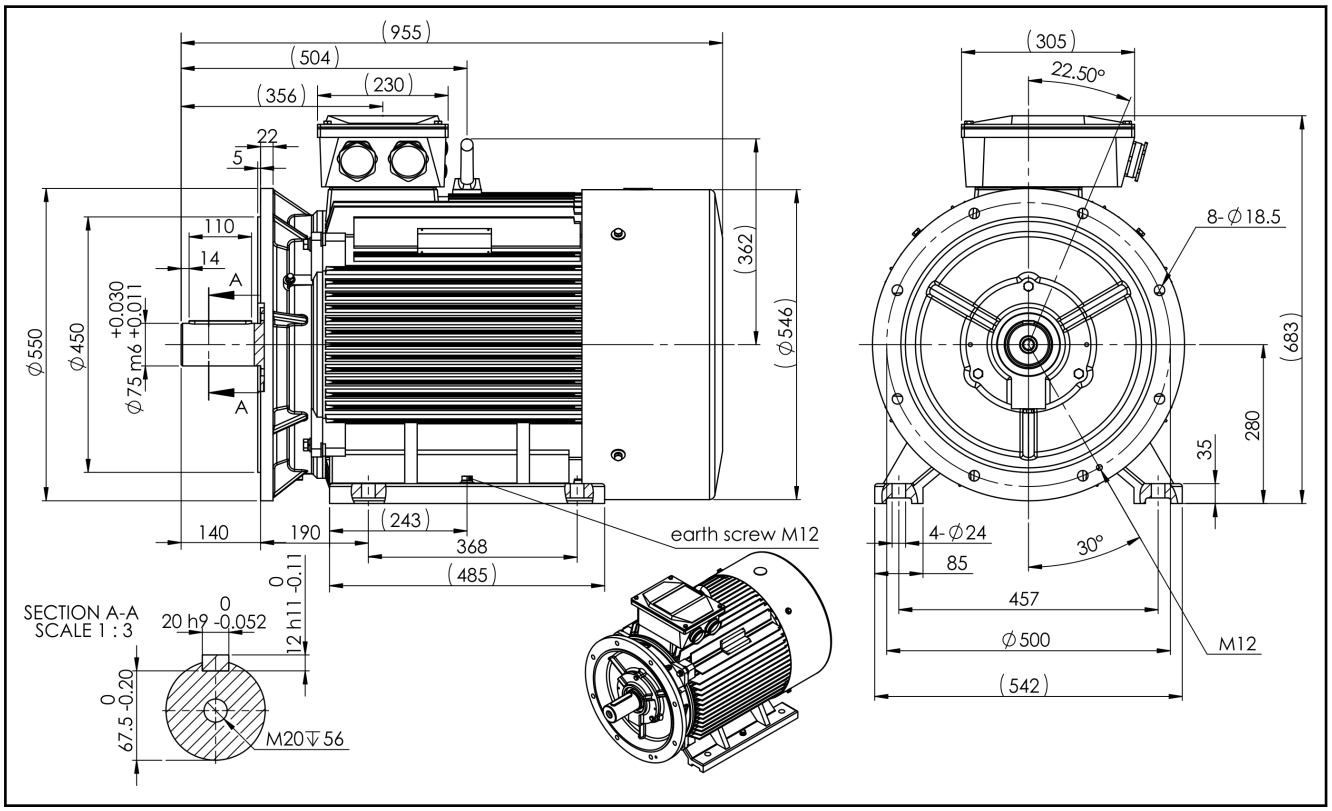

*Fig. 4-47: Specifications MOT-FC-ET2-B35-280S-4-5CB-**0075**-C3T-HOY*

Technical Data

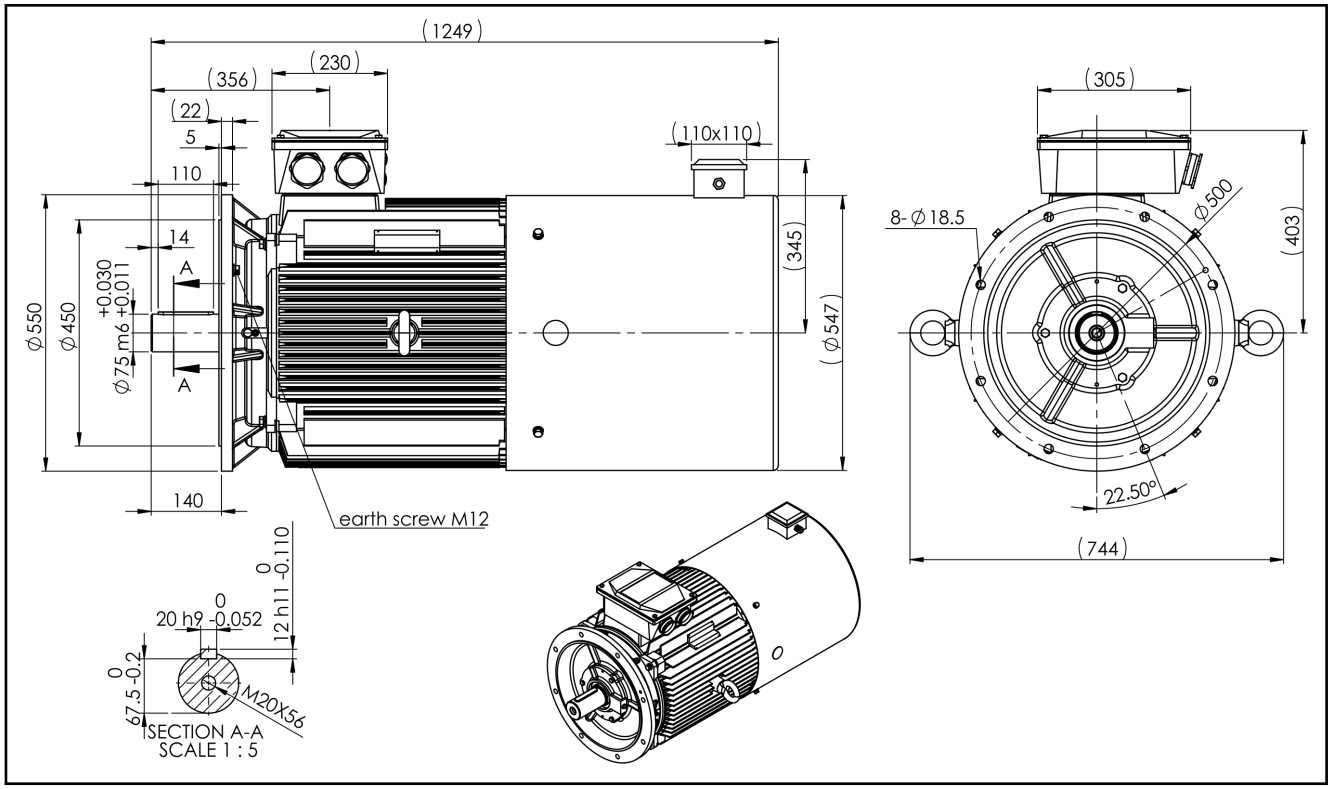

*Fig. 4-48: Specifications MOT-FC-EV2-*BV-280S-4-5CB-**0075**-C3T-HOY*

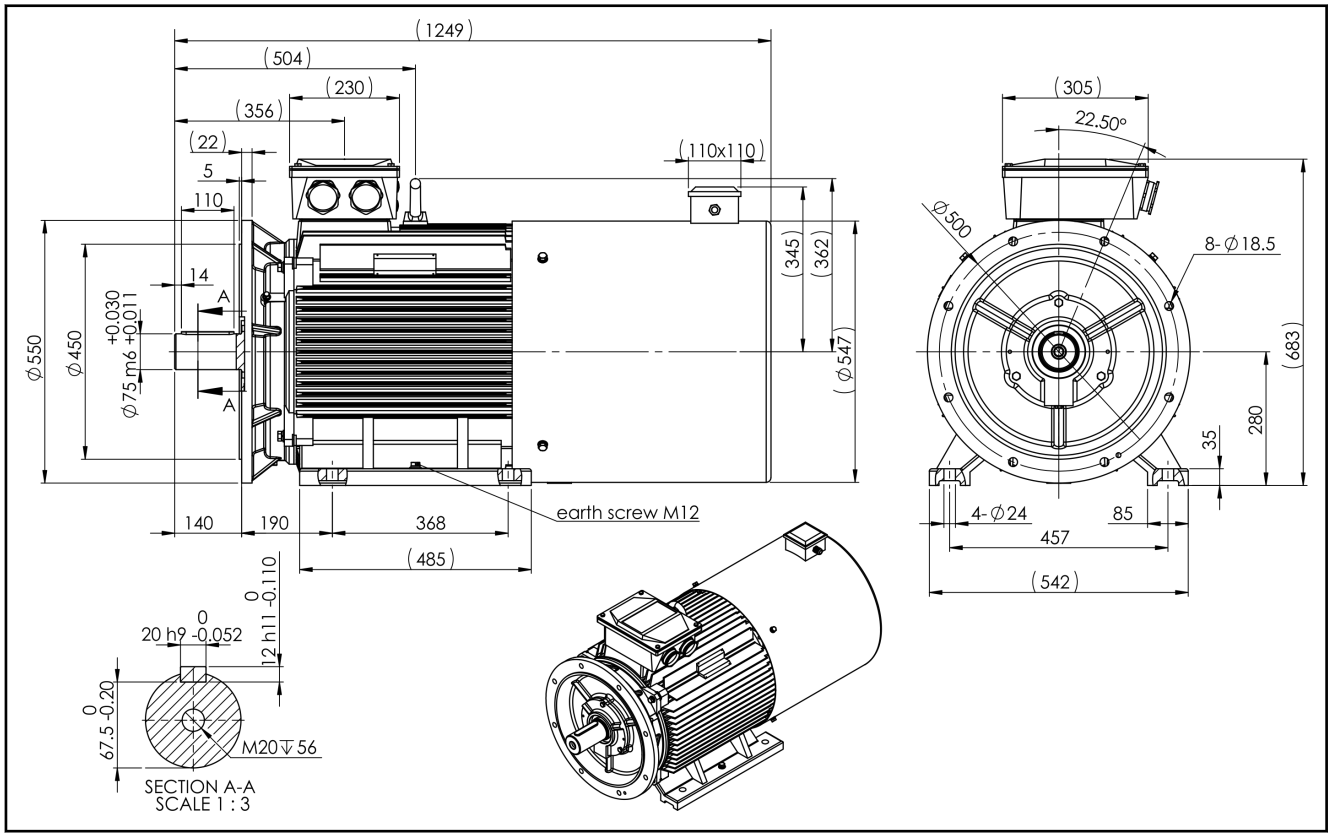

*Fig. 4-49: Specifications MOT-FC-EV2-B35-280S-4-5CB-**0075**-C3T-HOY*

4.19 Technical Data Frame Size 280M / 90 kW

4.19.1 Data Sheet

Designation	Symbol	Unit	MOT-FC 280M / 90 kW
Rated power	P_N	kW	90.00
Rated torque	M_N	Nm	580.0
Rated current	I_N	A	160.0
Rated frequency	f_N	Hz	50.0
Rated voltage	U_N	V	400
Winding interconnection	-	-	D
Rated speed	n_N	min^{-1}	1,480
Performance factor	cosφ	-	0.87
Efficiency at 100%-load	η_{100}	-	94.20
Efficiency at 75%-load	η_{75}	-	94.10
Efficiency at 50%-load	η_{50}	-	93.30
Maximum torque	M_{max}	Nm	1,280.0
Maximum current	I_{max}	A	400.0
Maximum velocity	n_{max}	min^{-1}	2,800
Mechanical parameters			
Number of pole pairs	o	-	2
Bearing A-side	-	-	6314/C3
Bearing B-side	-	-	6314/C3 CIB
Moment of inertia of the rotor	J_{rot}	kg * m²	1.6300000
Mass	m_{mot}	kg	672.0
Sound pressure level	L_P	dB[A]	72
Cable gland at terminal box	-	mm	M63 x 1.5 (2x)
Terminal board bolts	-	mm	M10
Ø-clamping range of connection clamps	-	mm	37 ... 44
			Latest amendment: 2014-08-05

Tab. 4-18: Technical Data Frame Size 280M / 90 kW

Technical Data

4.19.2 Frame Size 280M / 90 kW Specifications

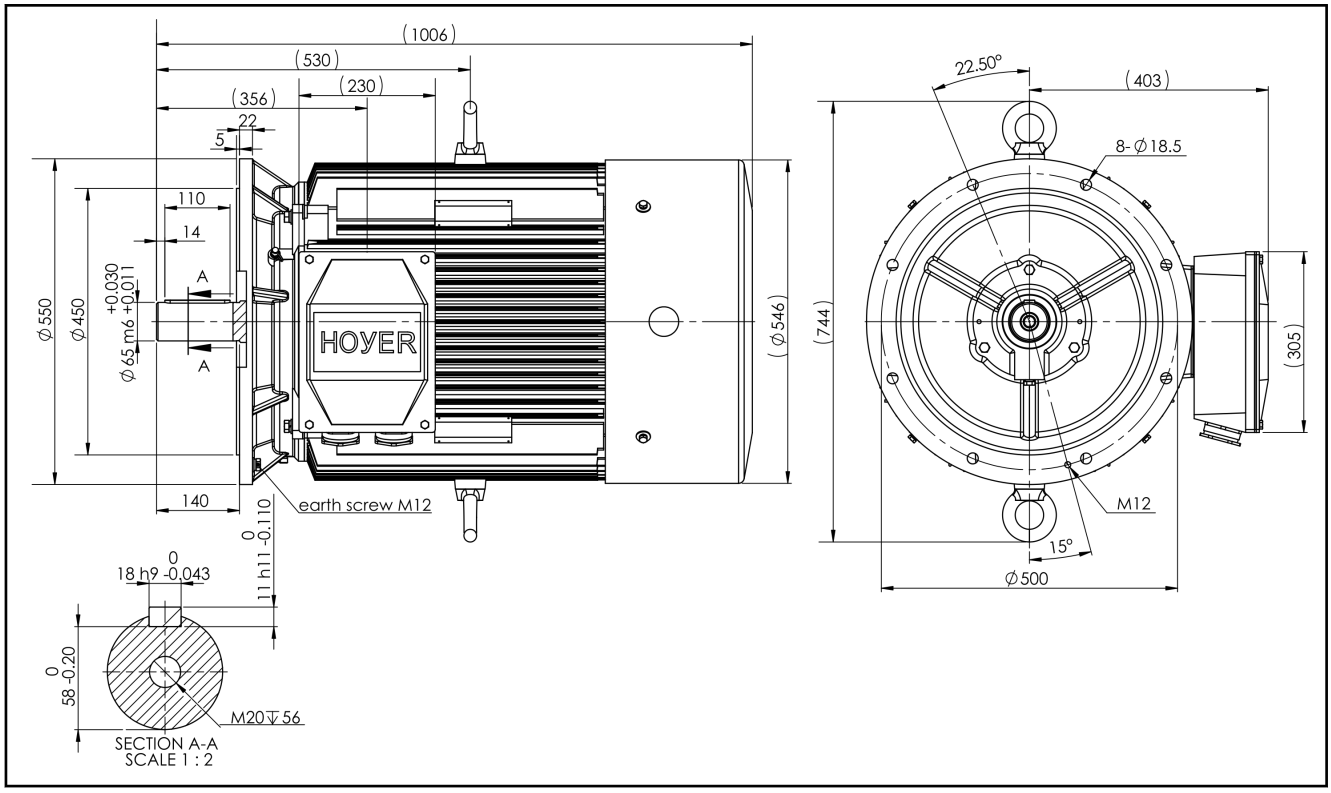

*Fig. 4-50: Specifications MOT-FC-ET2-*BV-280M-4-5CB-**0090**-C3T-HOY*

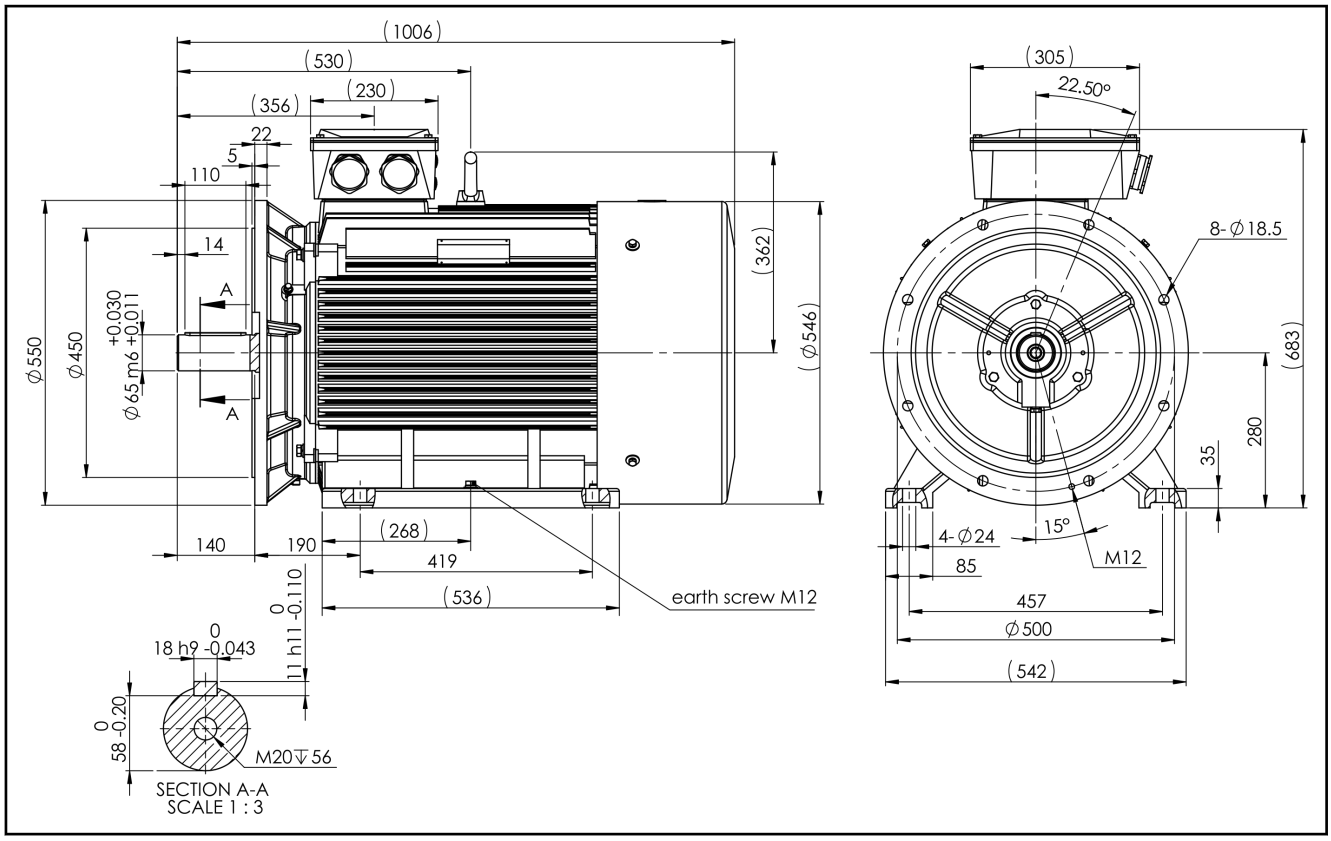

*Fig. 4-51: Specifications MOT-FC-ET2-B35-280M-4-5CB-**0090**-C3T-HOY*

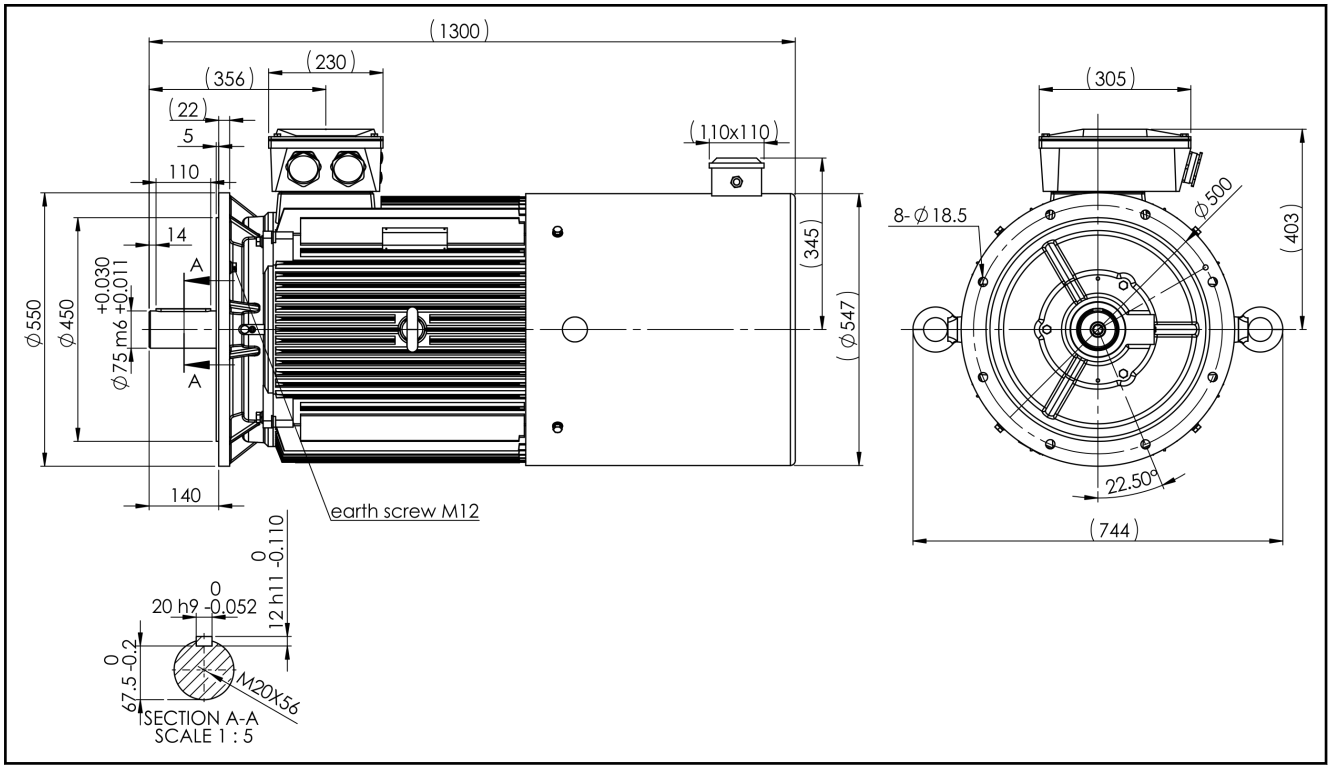

*Fig. 4-52: Specifications MOT-FC-EV2-*BV-280M-4-5CB-**0090**-C3T-HOY*

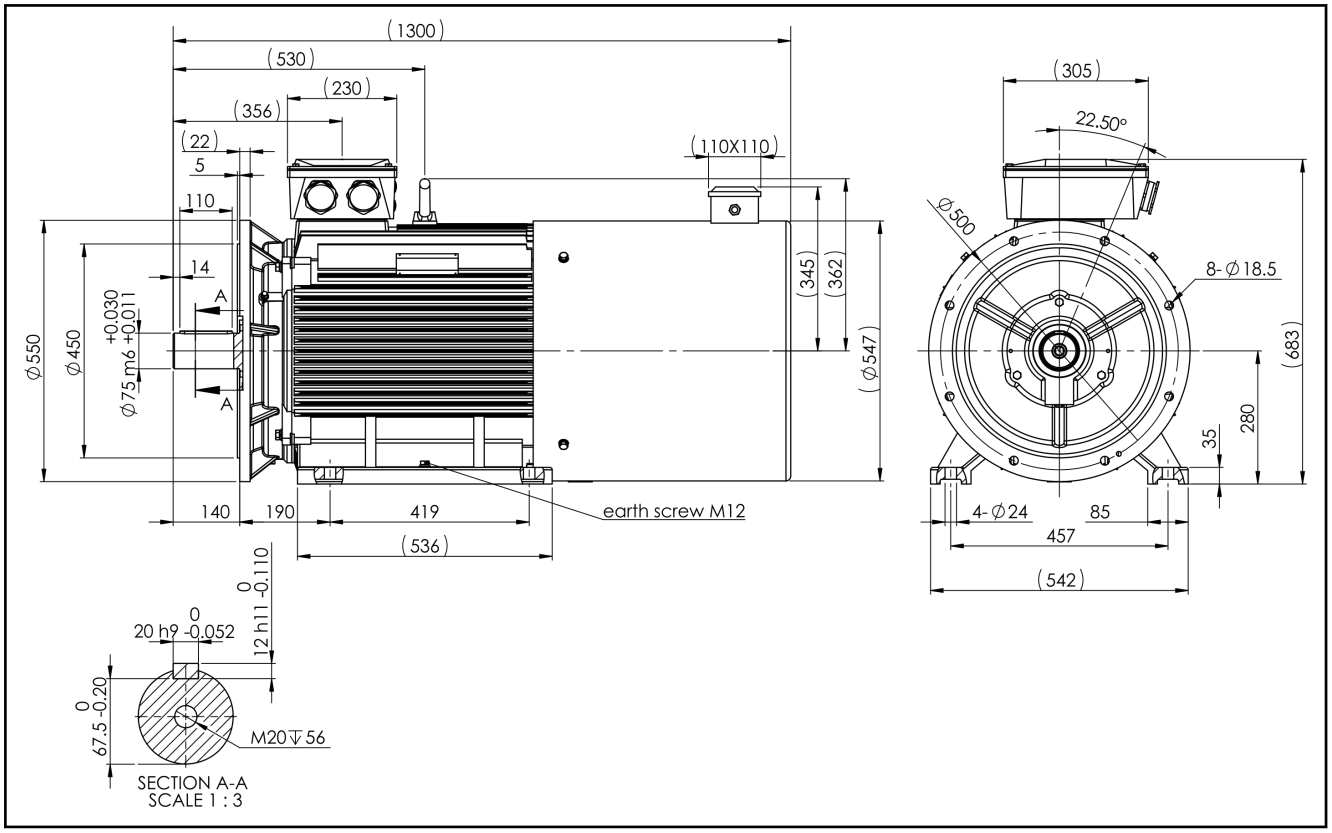

*Fig. 4-53: Specifications MOT-FC-EV2-B35-280M-4-5CB-**0090**-C3T-HOY*

4.20 Technical Data Frame Size 315S / 110 kW

4.20.1 Data Sheet

Designation	Symbol	Unit	MOT-FC 315S / 110 kW
Rated power	P_N	kW	110.00
Rated torque	M_N	Nm	705.0
Rated current	I_N	A	192.0
Rated frequency	f_N	Hz	50.0
Rated voltage	U_N	V	400
Winding interconnection	-	-	D
Rated speed	n_N	min^{-1}	1,480
Performance factor	cosφ	-	0.88
Efficiency at 100%-load	η_{100}	-	0.94
Efficiency at 75%-load	η_{75}	-	0.94
Efficiency at 50%-load	η_{50}	-	0.94
Maximum torque	M_{max}	Nm	1,550.0
Maximum current	I_{max}	A	480.0
Maximum velocity	n_{max}	min^{-1}	2,500
Mechanical parameters			
Number of pole pairs	o	-	2
Bearing A-side	-	-	6319/C3
Bearing B-side	-	-	6319/C3 CIB
Moment of inertia of the rotor	J_{rot}	kg * m²	2.8700000
Mass	m_{mot}	kg	840.0
Sound pressure level	L_P	dB[A]	76
Cable gland at terminal box	-	mm	M63 x 1.5 (2x)
Terminal board bolts	-	mm	M16
Ø-clamping range of connection clamps	-	mm	37 ... 44
			Latest amendment: 2014-08-05

Tab. 4-19: Technical Data Frame Size 315S / 110 kW

4.20.2 Frame Size 315S / 110 kW Specifications

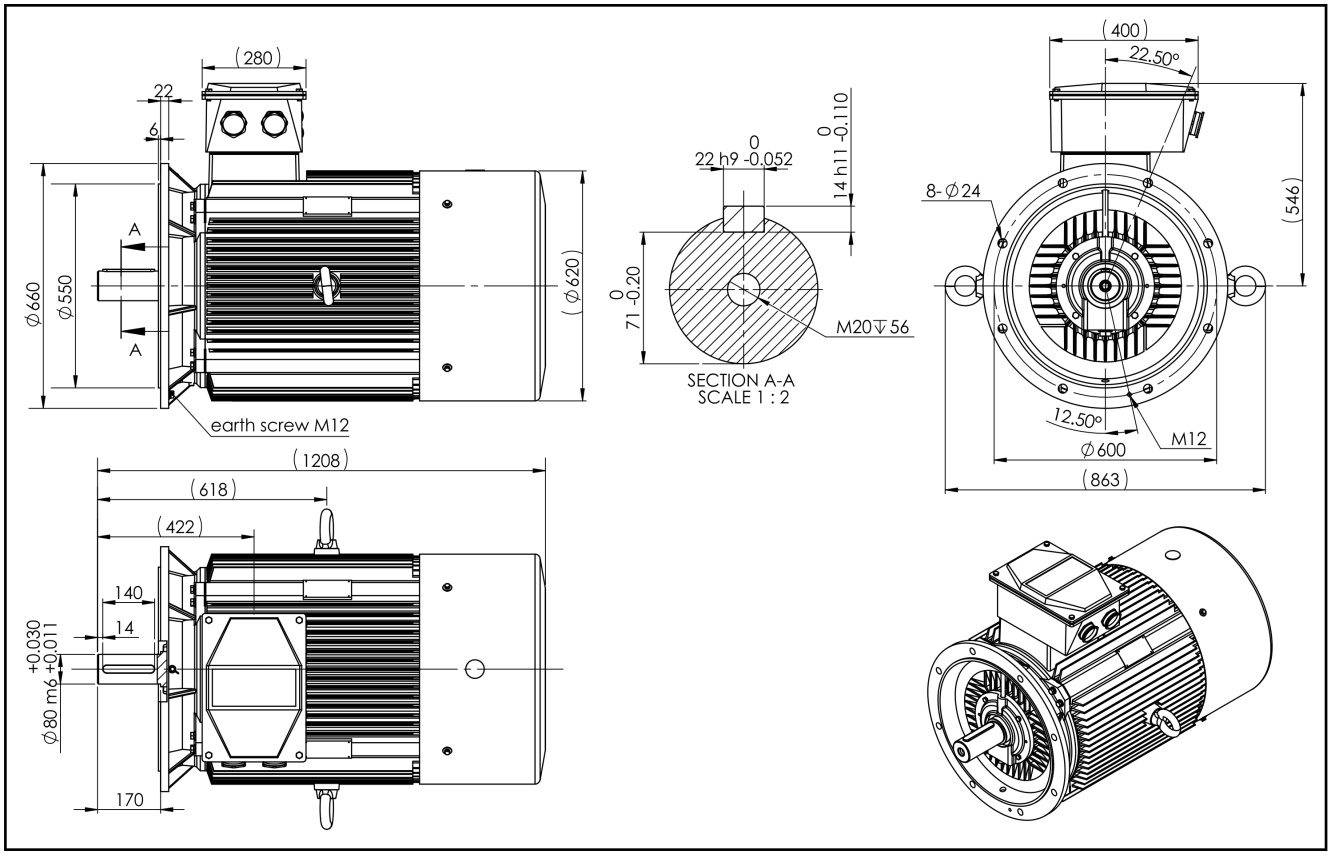

*Fig. 4-54: Specifications MOT-FC-ET2-*BV-315S-4-5CB-**0110**-C3T-HOY*

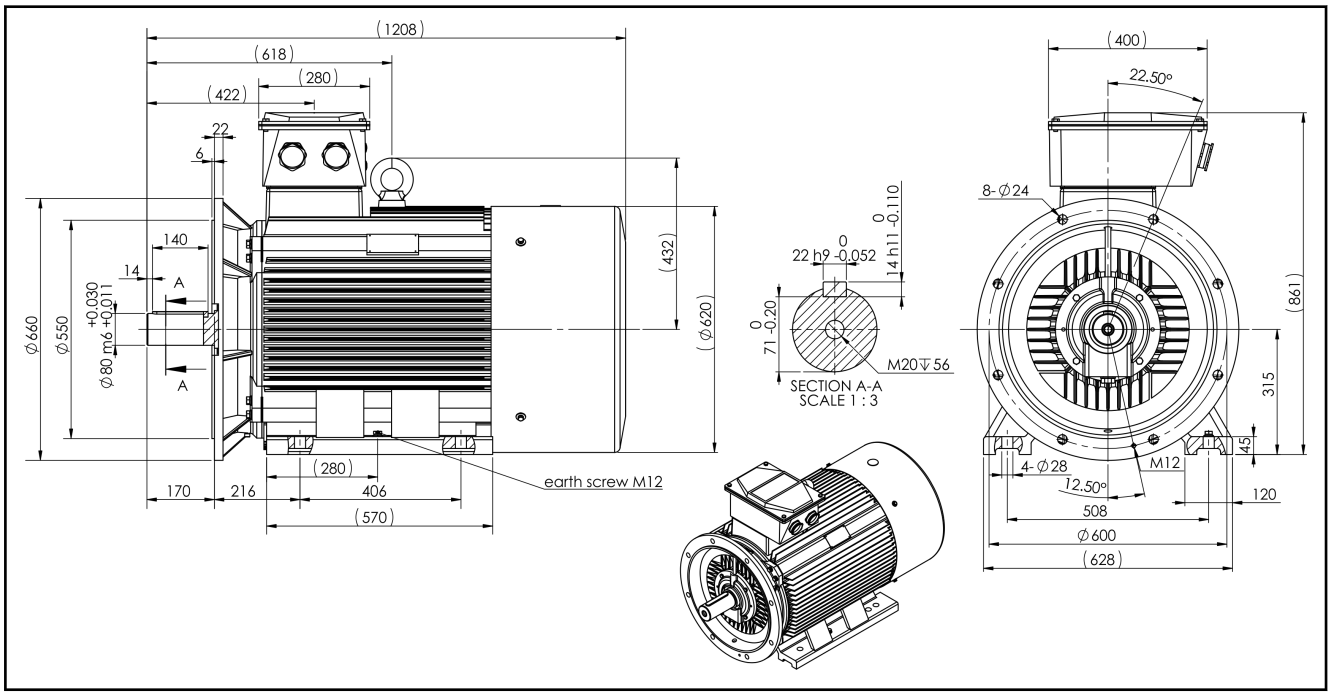

*Fig. 4-55: Specifications MOT-FC-ET2-B35-315S-4-5CB-**0110**-C3T-HOY*

Technical Data

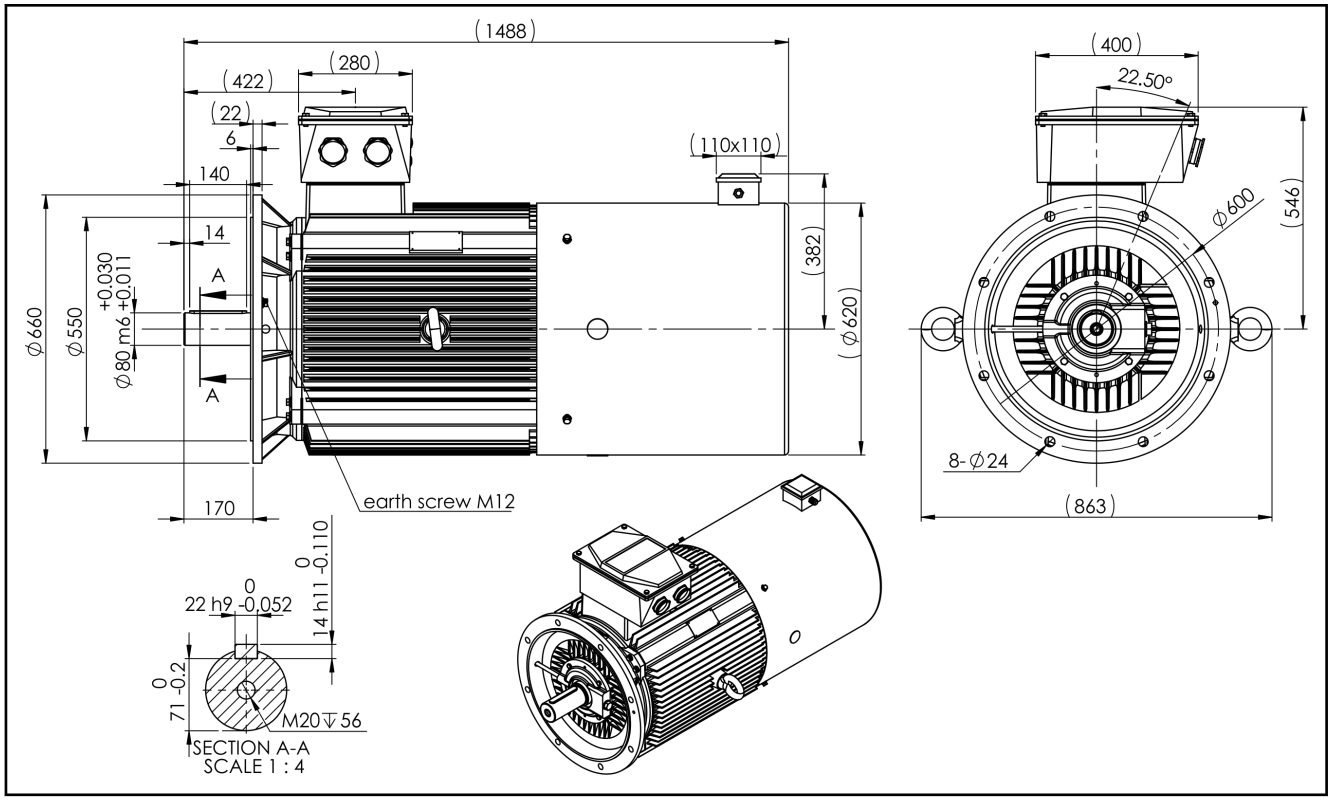

*Fig. 4-56: Specifications MOT-FC-EV2-*BV-315S-4-5CB-**0110**-C3T-HOY*

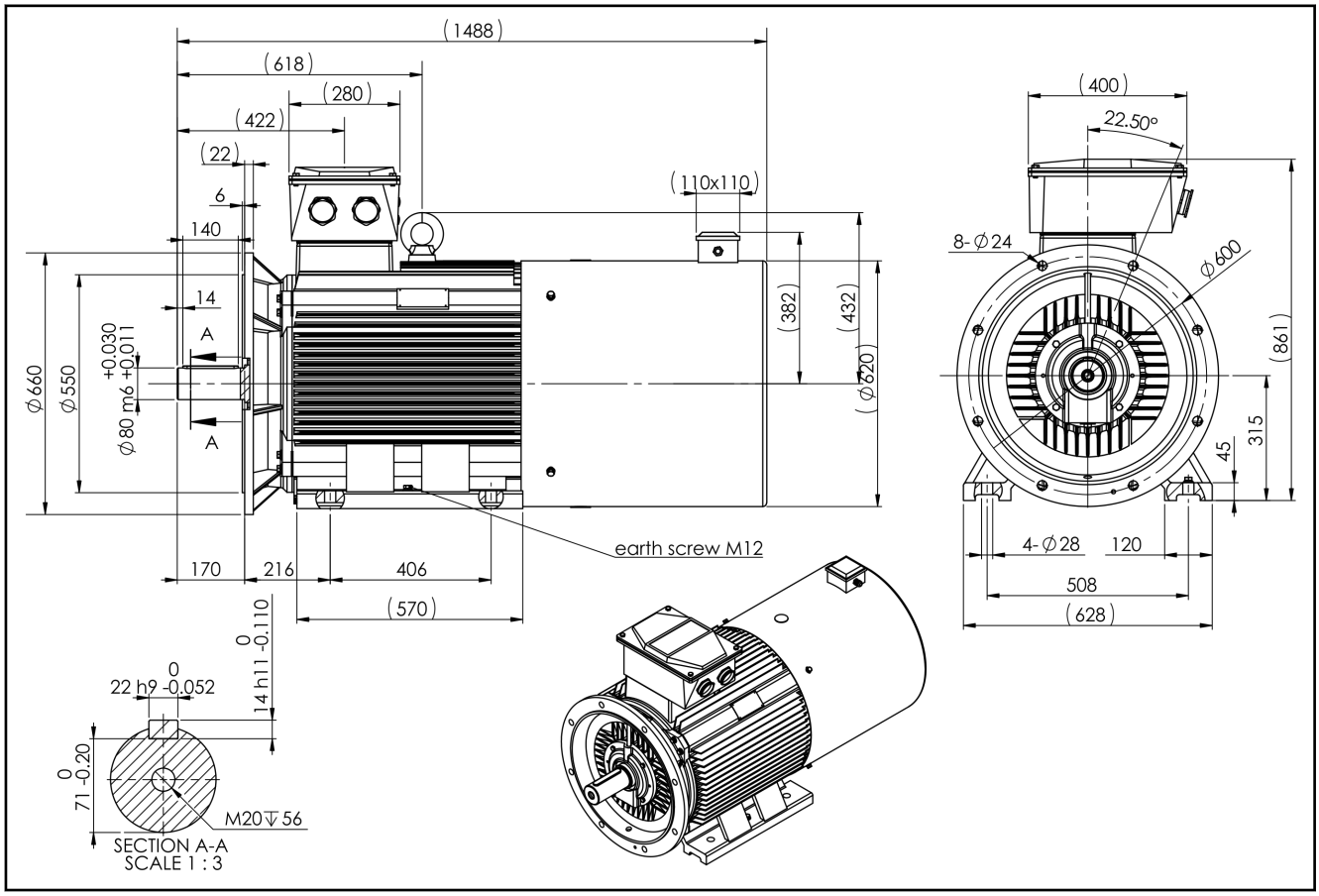

*Fig. 4-57: Specifications MOT-FC-EV2-B35-315S-4-5CB-**0110**-C3T-HOY*

4.21 Technical Data Frame Size 315M / 132 kW

4.21.1 Data Sheet

Designation	Symbol	Unit	MOT-FC 315M / 132 kW
Rated power	P_N	kW	132.00
Rated torque	M_N	Nm	850.0
Rated current	I_N	A	230.0
Rated frequency	f_N	Hz	50.0
Rated voltage	U_N	V	400
Winding interconnection	-	-	D
Rated speed	n_N	min^{-1}	1,480
Performance factor	cosφ	-	0.88
Efficiency at 100%-load	η_{100}	-	0.95
Efficiency at 75%-load	η_{75}	-	0.95
Efficiency at 50%-load	η_{50}	-	0.94
Maximum torque	M_{max}	Nm	1,870.0
Maximum current	I_{max}	A	575.0
Maximum velocity	n_{max}	min^{-1}	2,500
Mechanical parameters			
Number of pole pairs	o	-	2
Bearing A-side	-	-	6319/C3
Bearing B-side	-	-	6319/C3 CIB
Moment of inertia of the rotor	J_{rot}	kg * m²	3.2600000
Mass	m_{mot}	kg	930.0
Sound pressure level	L_P	dB[A]	76
Cable gland at terminal box	-	mm	M63 x 1.5 (2x)
Terminal board bolts	-	mm	M16
Ø-clamping range of connection clamps	-	mm	37 ... 44
			Latest amendment: 2014-08-05

Tab. 4-20: Technical Data Frame Size 315M / 132 kW

Technical Data

4.21.2 Frame Size 315M / 132 kW Specifications

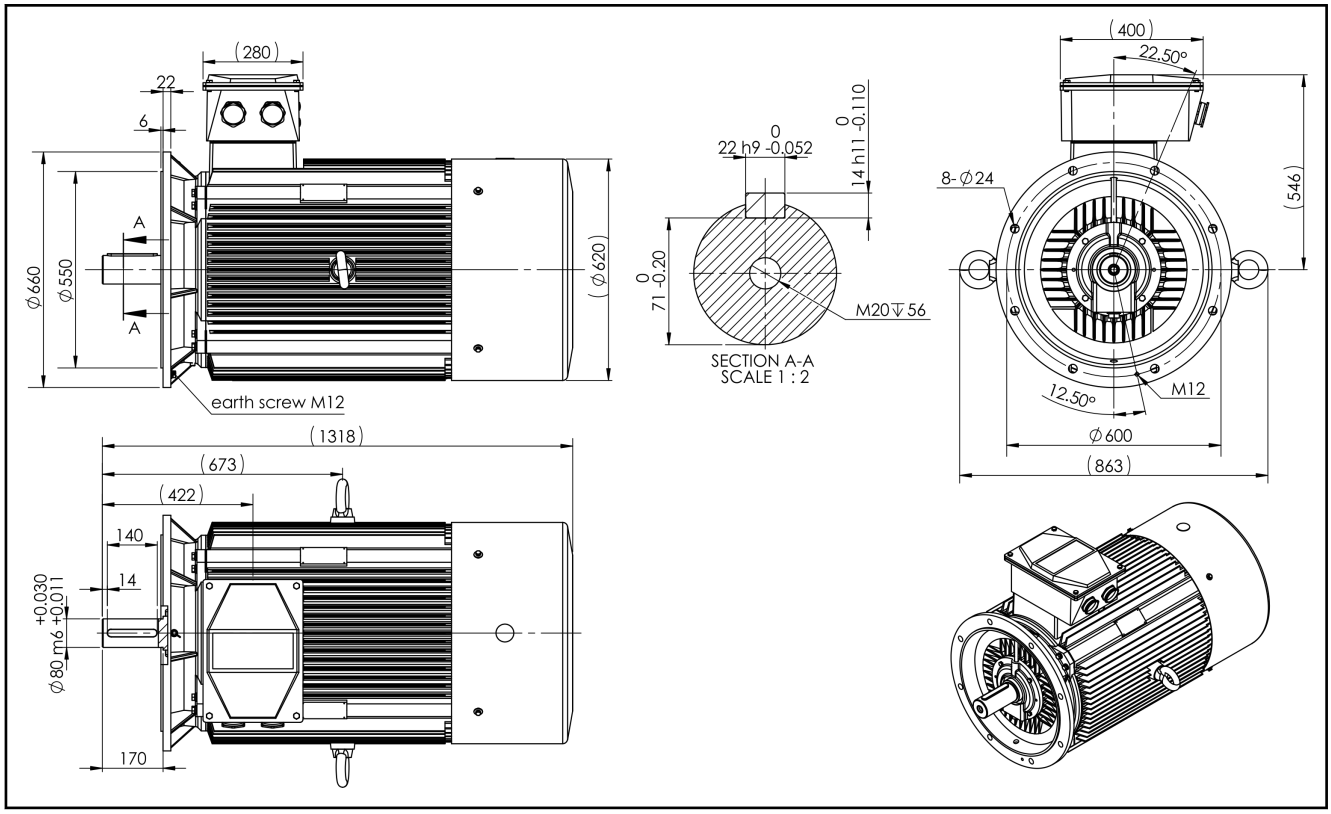

*Fig. 4-58: Specifications MOT-FC-ET2-*BV-315M-4-5CB-**0132**-C3T-HOY*

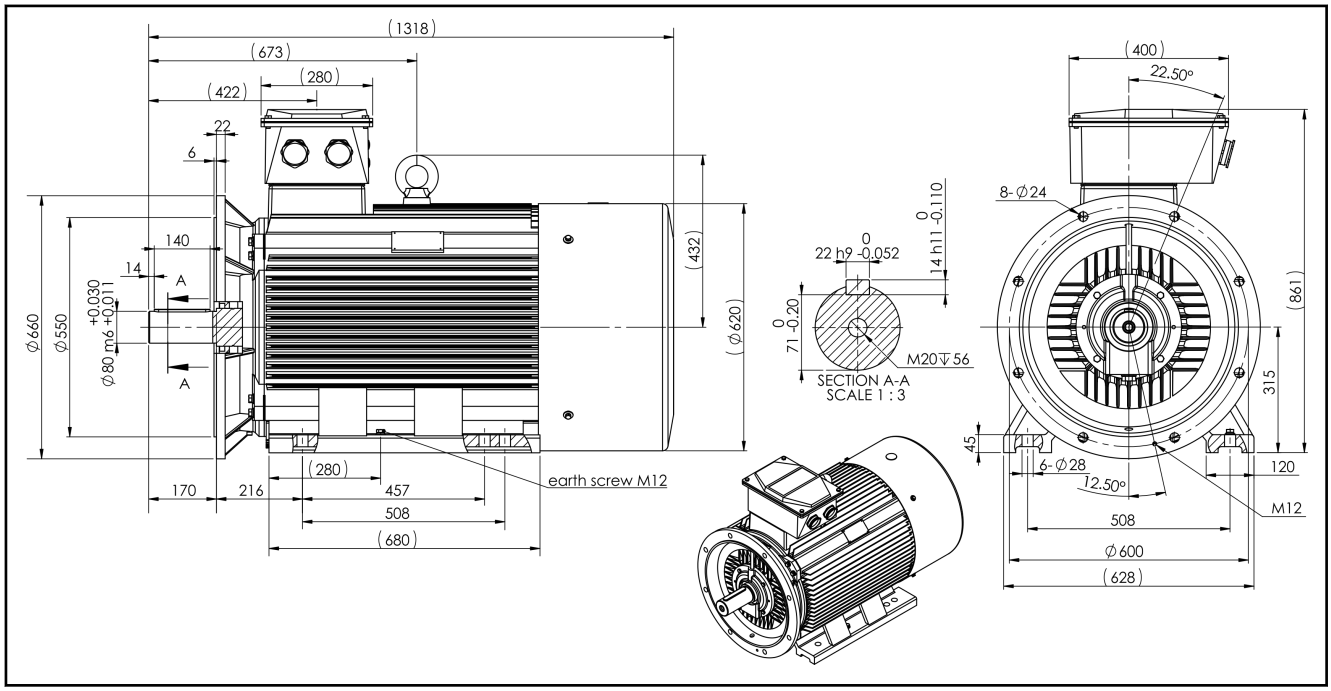

*Fig. 4-59: Specifications MOT-FC-ET2-B35-315M-4-5CB-**0132**-C3T-HOY*

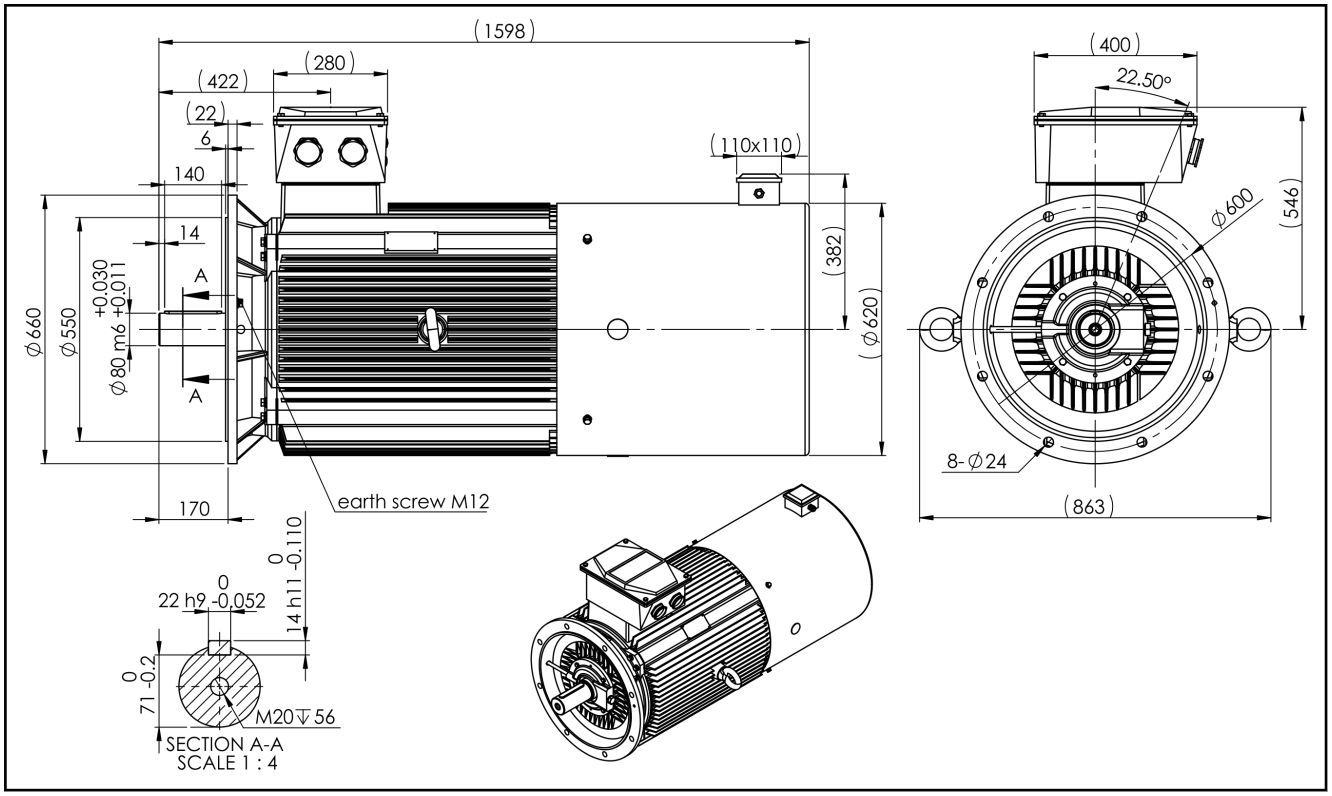

*Fig. 4-60: Specifications MOT-FC-EV2-*BV-315M-4-5CB-**0132**-C3T-HOY*

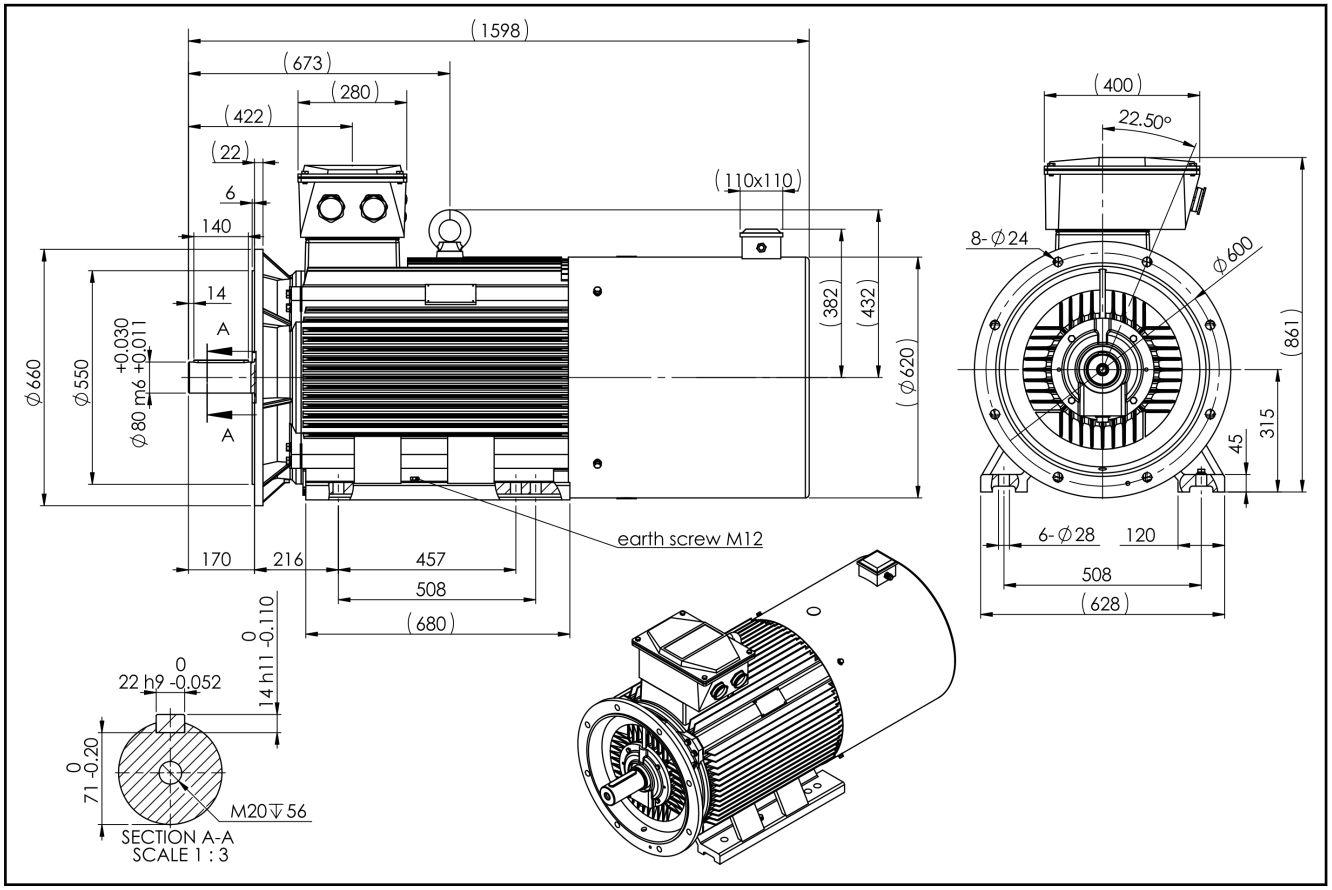

*Fig. 4-61: Specifications MOT-FC-EV2-B35-315M-4-5CB-**0132**-C3T-HOY*

Technical Data

4.22 Technical Data Frame Size 315L / 160 kW

4.22.1 Data Sheet

Designation	Symbol	Unit	MOT-FC 315L / 160 kW
Rated power	P_N	kW	160.00
Rated torque	M_N	Nm	1,030.0
Rated current	I_N	A	275.0
Rated frequency	f_N	Hz	50.0
Rated voltage	U_N	V	400
Winding interconnection	-	-	D
Rated speed	n_N	min^{-1}	1,480
Performance factor	cosφ	-	0.89
Efficiency at 100%-load	η_{100}	-	0.95
Efficiency at 75%-load	η_{75}	-	0.95
Efficiency at 50%-load	η_{50}	-	0.94
Maximum torque	M_{max}	Nm	2,260.0
Maximum current	I_{max}	A	685.0
Maximum velocity	n_{max}	min^{-1}	2,500
Mechanical parameters			
Number of pole pairs	o	-	2
Bearing A-side	-	-	6319/C3
Bearing B-side	-	-	6319/C3 CIB
Moment of inertia of the rotor	J_{rot}	kg * m²	3.7100000
Mass	m_{mot}	kg	1,000.0
Sound pressure level	L_P	dB[A]	76
Cable gland at terminal box	-	mm	M63 x 1.5 (2x)
Terminal board bolts	-	mm	M16
Ø-clamping range of connection clamps	-	mm	37 ... 44
			Latest amendment: 2014-08-05

Tab. 4-21: Technical Data Frame Size 315L / 160 kW

4.22.2 Frame Size 315L / 160 kW Specifications

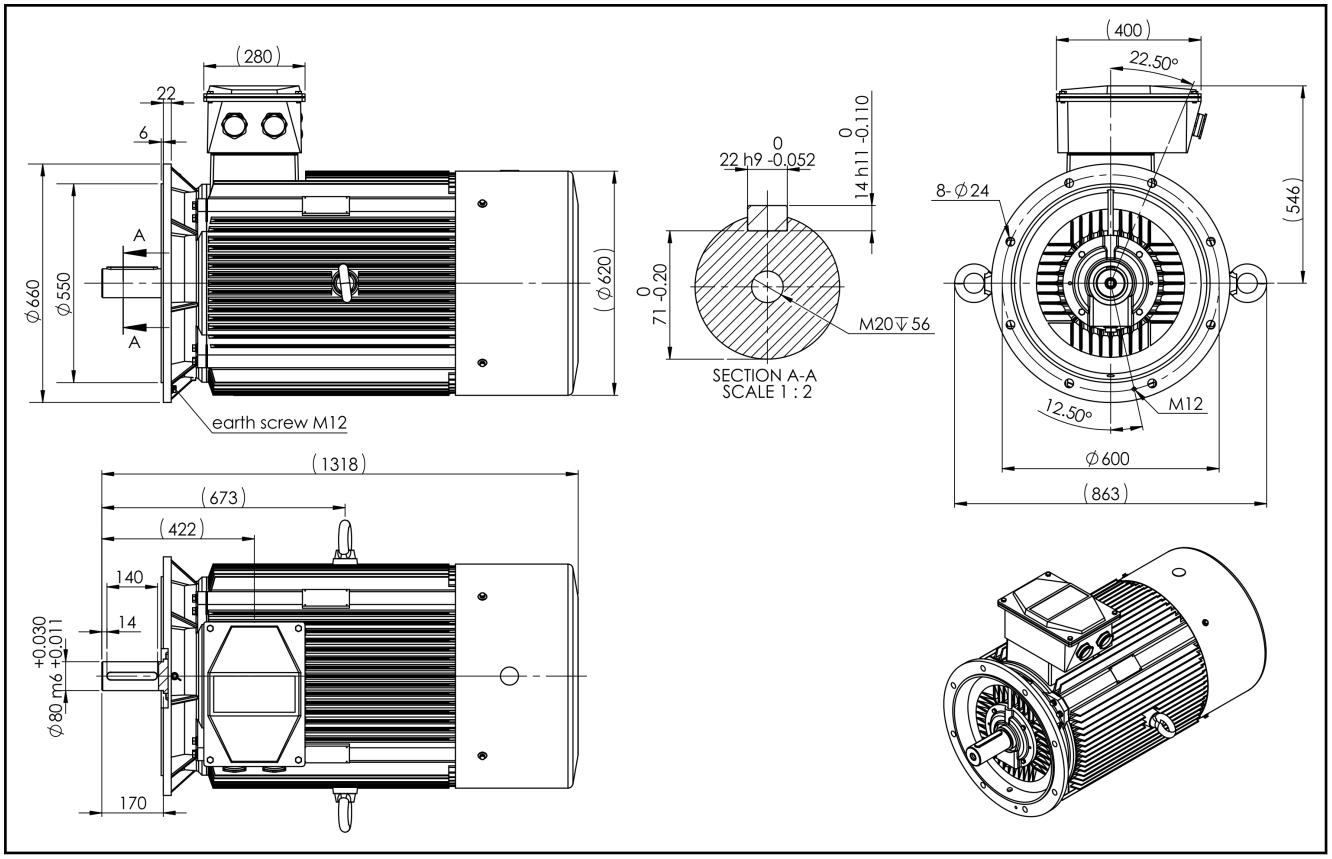

*Fig. 4-62: Specifications MOT-FC-ET2-*BV-315L1-4-5CB-**0160**-C3T-HOY*

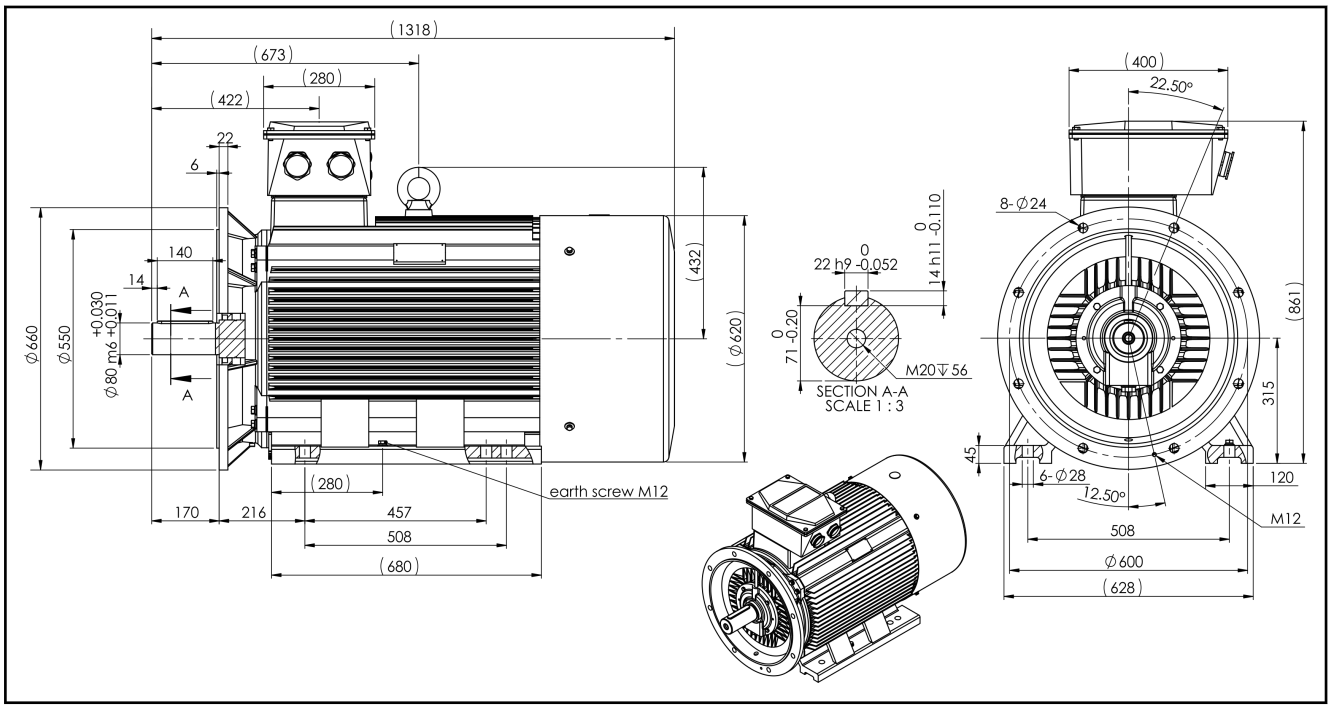

*Fig. 4-63: Specifications MOT-FC-ET2-B35-315L1-4-5CB-**0160**-C3T-HOY*

Technical Data

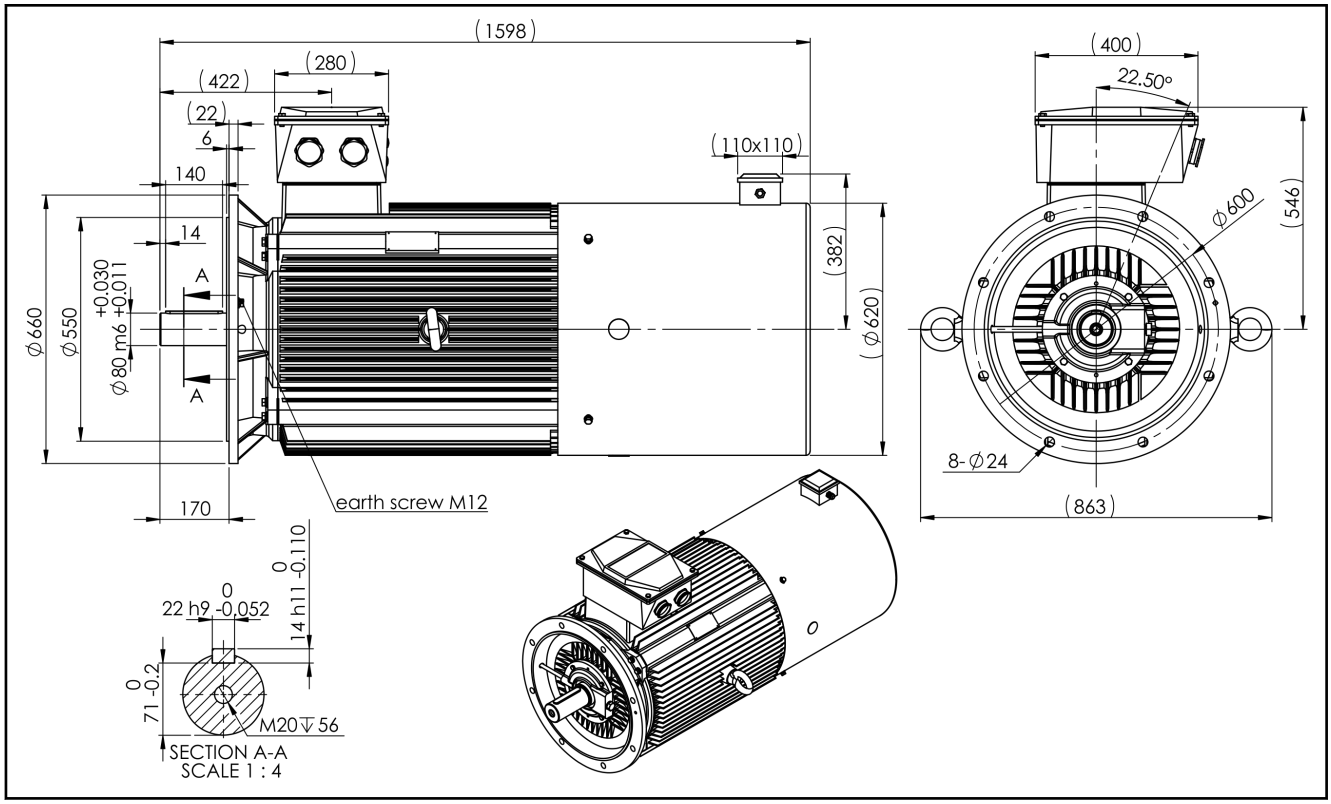

*Fig. 4-64: Specifications MOT-FC-EV2-*BV-315L1-4-5CB-**0160**-C3T-HOY*

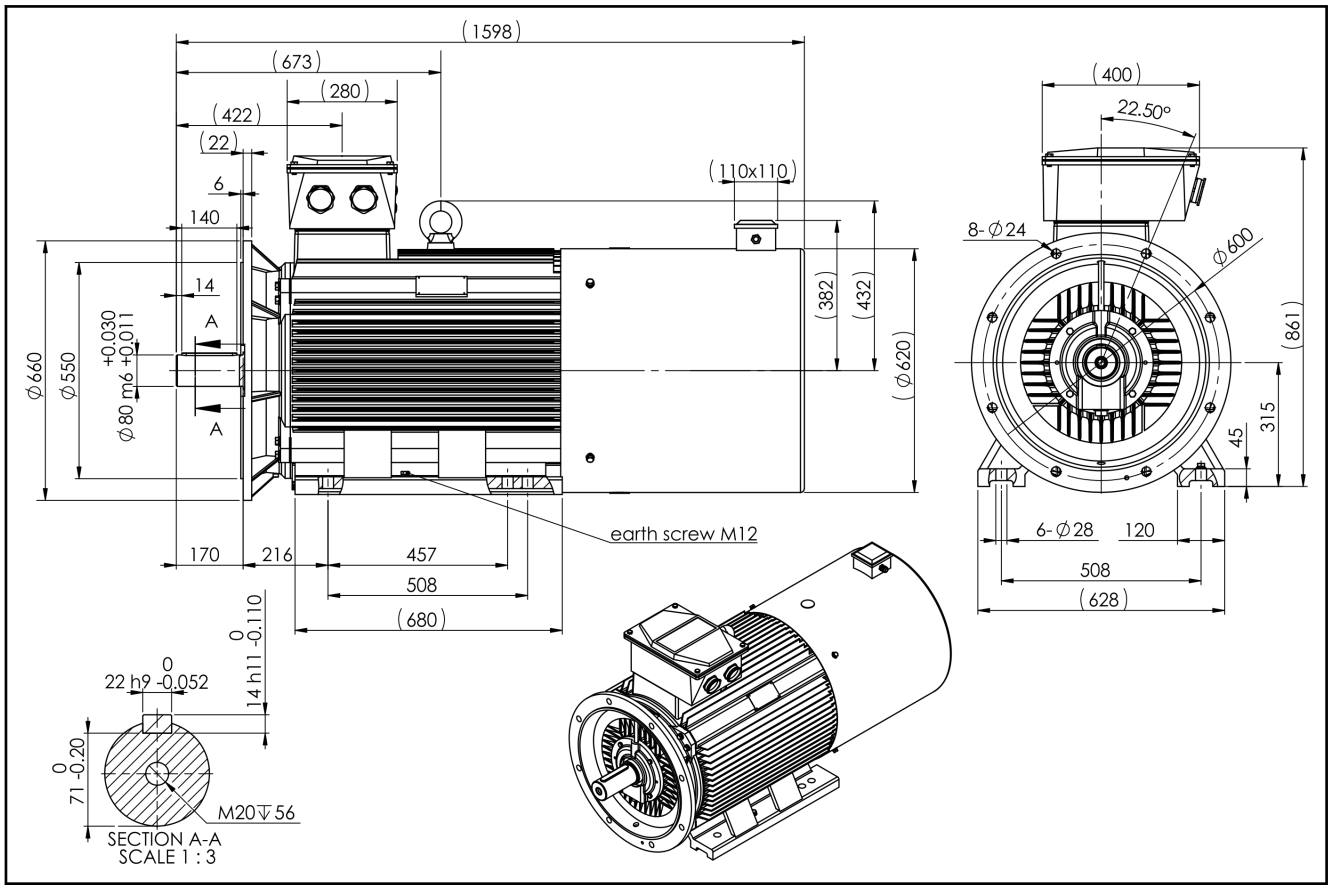

*Fig. 4-65: Specifications MOT-FC-EV2-B35-315L1-4-5CB-**0160**-C3T-HOY*

4.23 Technical Data Frame Size 315L / 200 kW

4.23.1 Data Sheet

Designation	Symbol	Unit	MOT-FC 315L / 200 kW
Rated power	P_N	kW	200.00
Rated torque	M_N	Nm	1,285.0
Rated current	I_N	A	345.0
Rated frequency	f_N	Hz	50.0
Rated voltage	U_N	V	400
Winding interconnection	-	-	D
Rated speed	n_N	min^{-1}	1,480
Performance factor	cosφ	-	0.89
Efficiency at 100%-load	η_{100}	-	0.95
Efficiency at 75%-load	η_{75}	-	0.95
Efficiency at 50%-load	η_{50}	-	0.94
Maximum torque	M_{max}	Nm	2,830.0
Maximum current	I_{max}	A	860.0
Maximum velocity	n_{max}	min^{-1}	2,500
Mechanical parameters			
Number of pole pairs	o	-	2
Bearing A-side	-	-	6319/C3
Bearing B-side	-	-	6319/C3 CIB
Moment of inertia of the rotor	J_{rot}	kg * m²	4.6700000
Mass	m_{mot}	kg	1,080.0
Sound pressure level	L_P	dB[A]	76
Cable gland at terminal box	-	mm	M63 x 1.5 (2x)
Terminal board bolts	-	mm	M16
Ø-clamping range of connection clamps	-	mm	37 ... 44
			Latest amendment: 2014-08-05

Tab. 4-22: Technical Data Frame Size 315L / 200 kW

Technical Data

4.23.2 Frame Size 315L / 200 kW Specifications

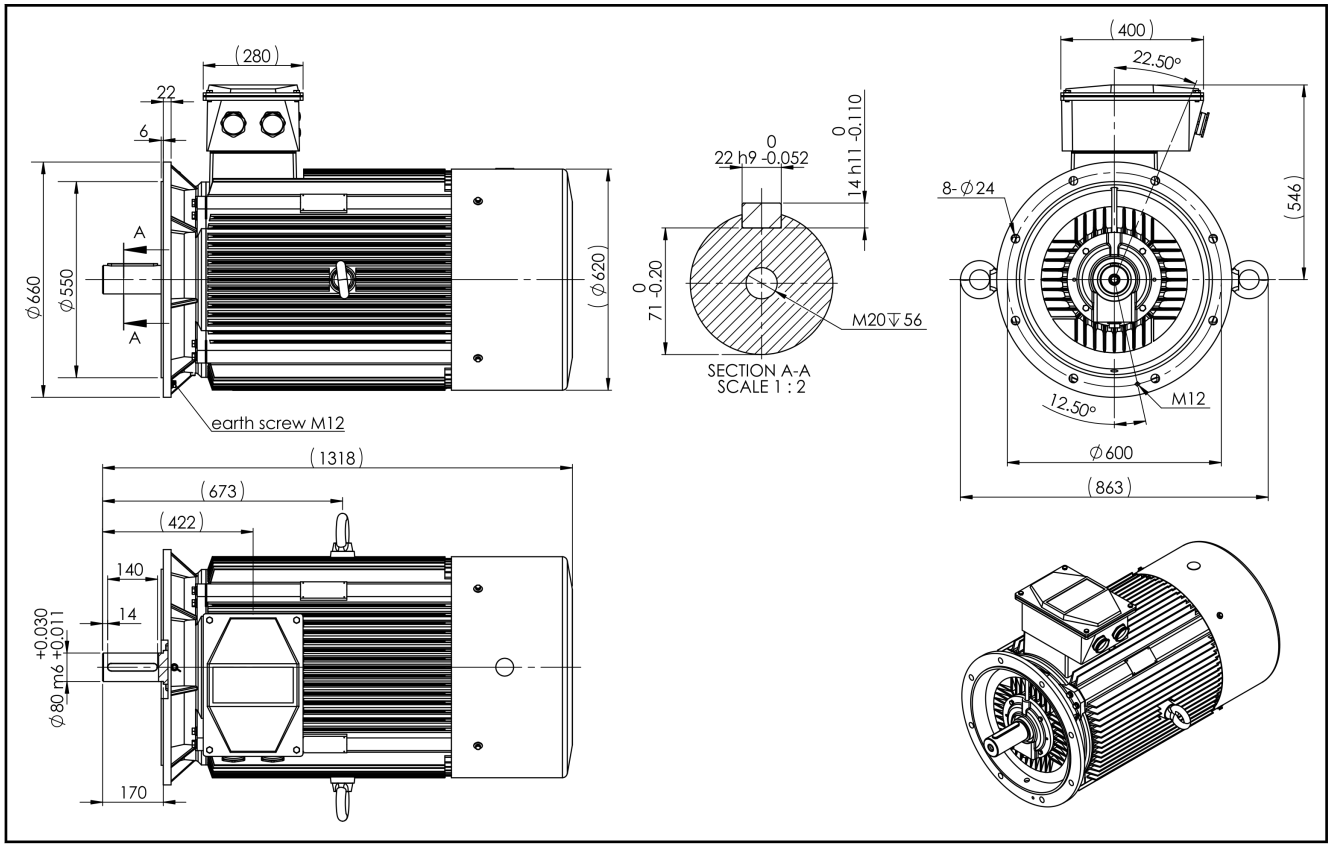

*Fig. 4-66: Specifications MOT-FC-ET2-*BV-315L2-4-5CB-**0200**-C3T-HOY*

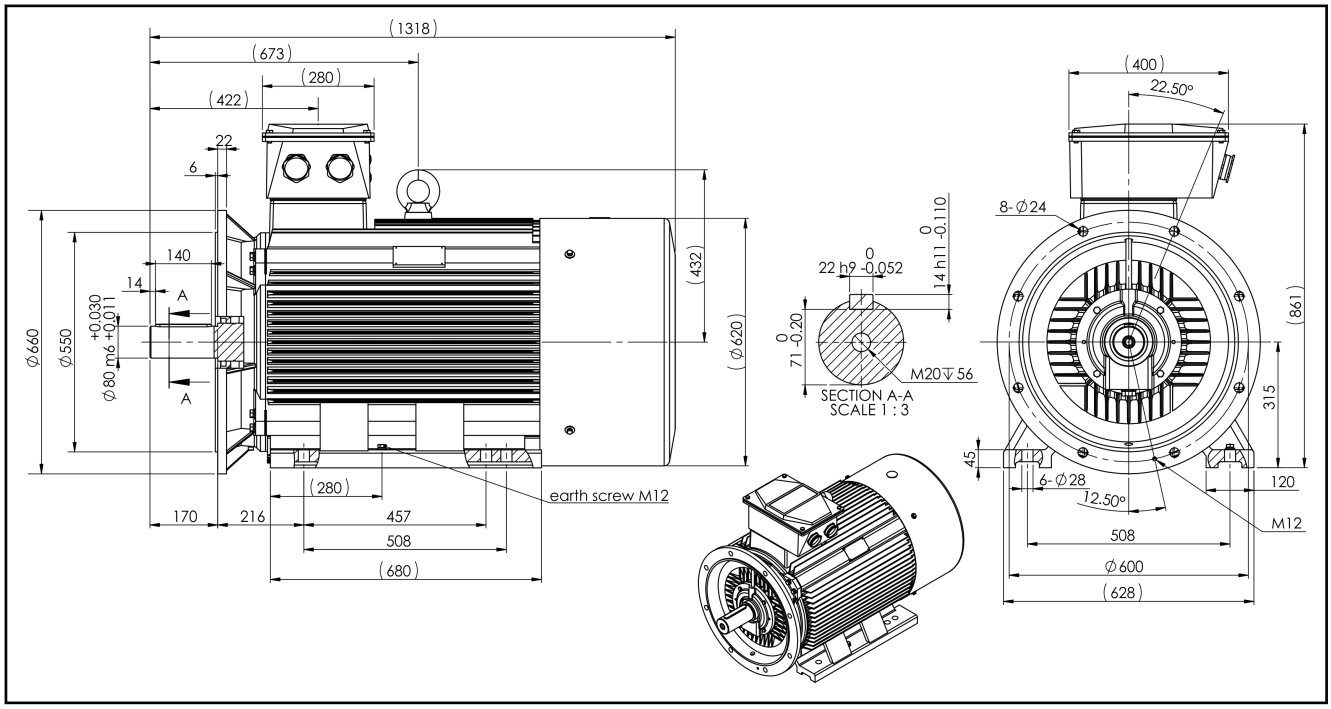

*Fig. 4-67: Specifications MOT-FC-ET2-B35-315L2-4-5CB-**0200**-C3T-HOY*

Technical Data

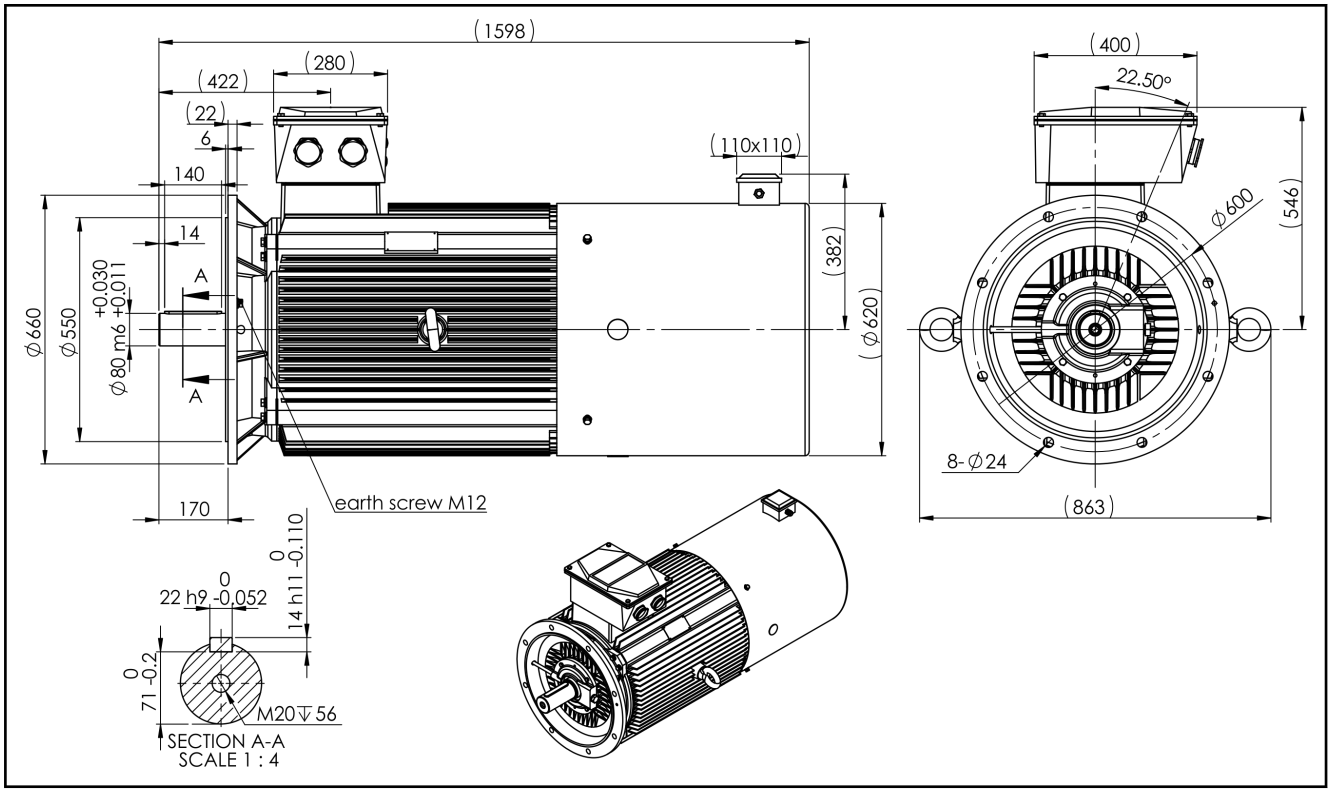

*Fig. 4-68: Specifications MOT-FC-EV2-*BV-315L2-4-5CB-**0200**-C3T-HOY*

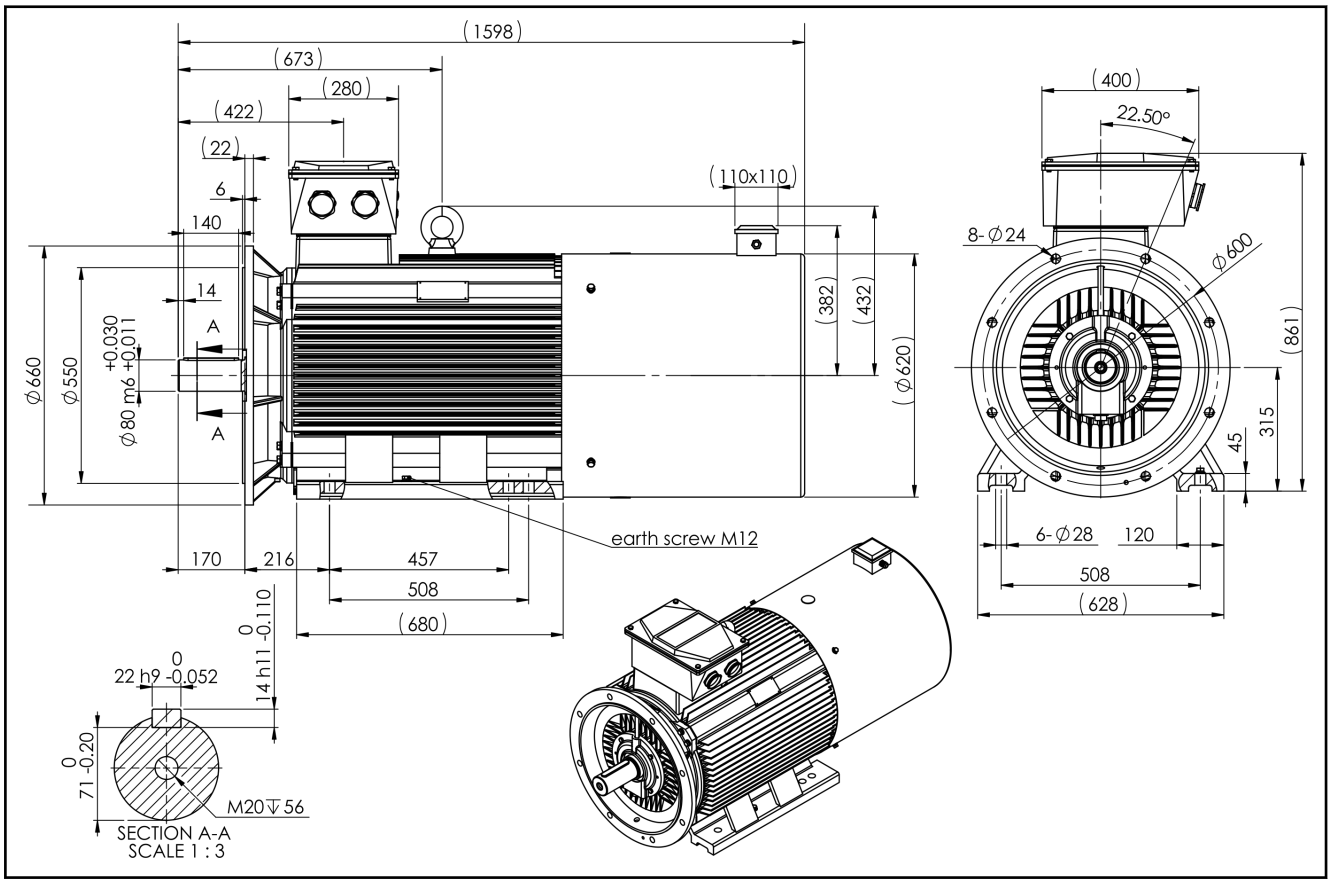

*Fig. 4-69: Specifications MOT-FC-EV2-B35-315L2-4-5CB-**0200**-C3T-HOY*

4.24 Technical Data Frame Size 355M / 250 kW

4.24.1 Data Sheet

Designation	Symbol	Unit	MOT-FC 355M / 250 kW
Rated power	P_N	kW	250.00
Rated torque	M_N	Nm	1,810.0
Rated current	I_N	A	425.0
Rated frequency	f_N	Hz	50.0
Rated voltage	U_N	V	400
Winding interconnection	-	-	D
Rated speed	n_N	min^{-1}	1,480
Performance factor	cosφ	-	0.90
Efficiency at 100%-load	η_{100}	-	0.95
Efficiency at 75%-load	η_{75}	-	0.95
Efficiency at 50%-load	η_{50}	-	0.94
Maximum torque	M_{max}	Nm	3,540.0
Maximum current	I_{max}	A	1,050.0
Maximum velocity	n_{max}	min^{-1}	2,200
Mechanical parameters			
Number of pole pairs	o	-	2
Bearing A-side	-	-	6322/C3
Bearing B-side	-	-	6322/C3 CIB
Moment of inertia of the rotor	J_{rot}	kg * m²	8.0200000
Mass	m_{mot}	kg	1,810.0
Sound pressure level	L_P	dB[A]	82
Cable gland at terminal box	-	mm	M72 x 2.0 (2x)
Terminal board bolts	-	mm	M16
Ø-clamping range of connection clamps	-	mm	48 ... 60
			Latest amendment: 2014-08-05

Tab. 4-23: Technical Data Frame Size 355M / 250 kW

4.24.2 Frame Size 355M / 250 kW Specifications

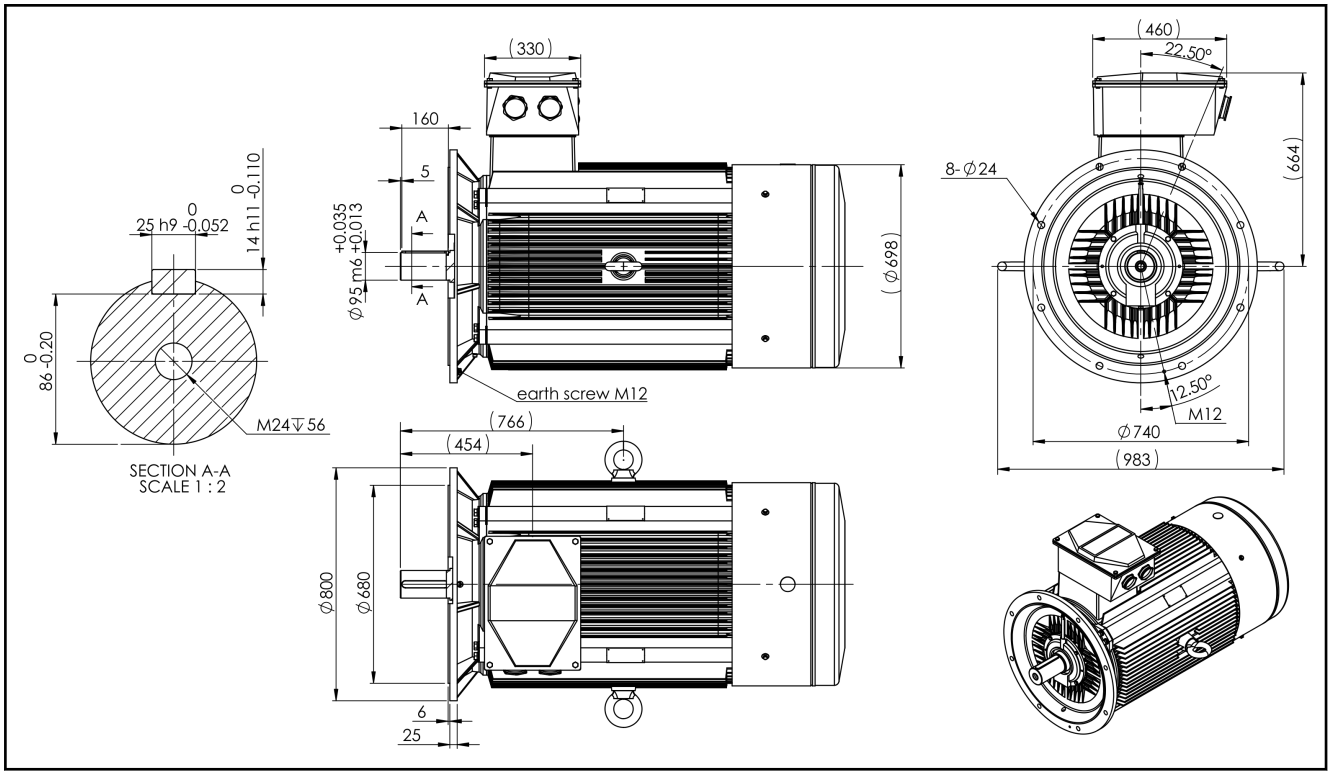

*Fig. 4-70: Specifications MOT-FC-ET2-*V1-355M-4-5CB-**0250**-C3T-HOY*

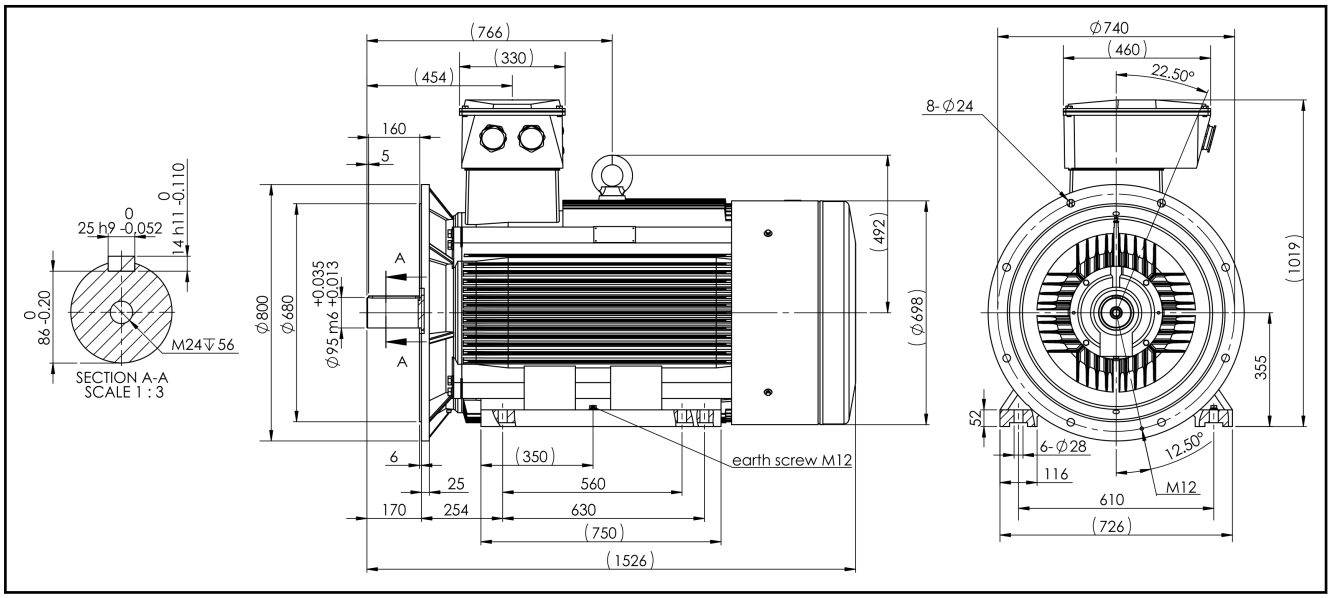

*Fig. 4-71: Specifications MOT-FC-ET2-B35-355M-4-5CB-**0250**-C3T-HOY*

Technical Data

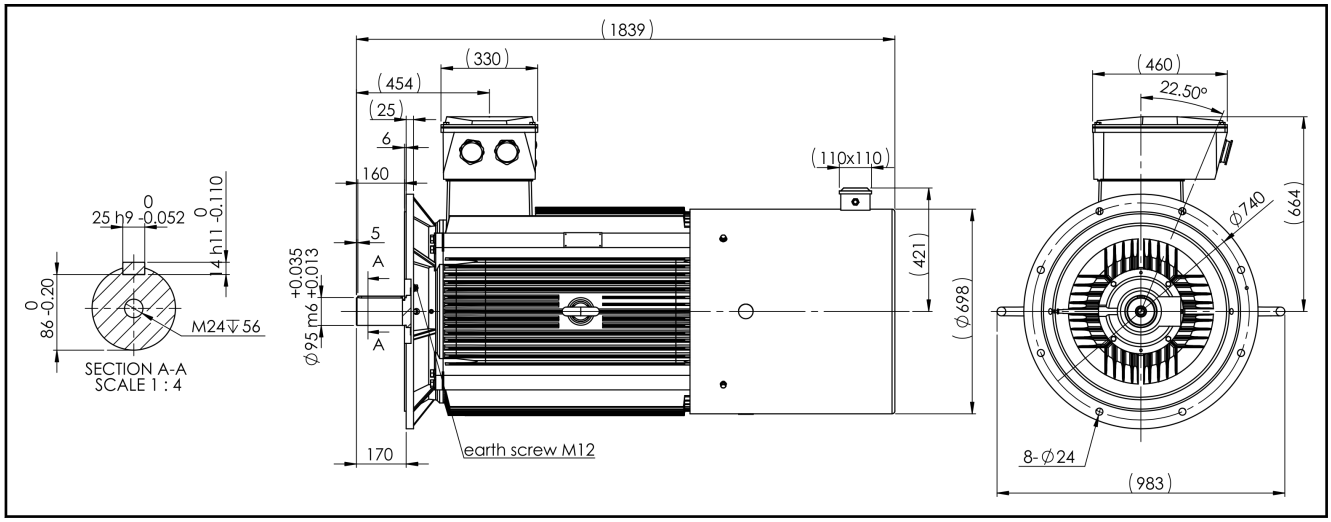

*Fig. 4-72: Specifications MOT-FC-EV2-*V1-355M-4-5CB-**0250**-C3T-HOY*

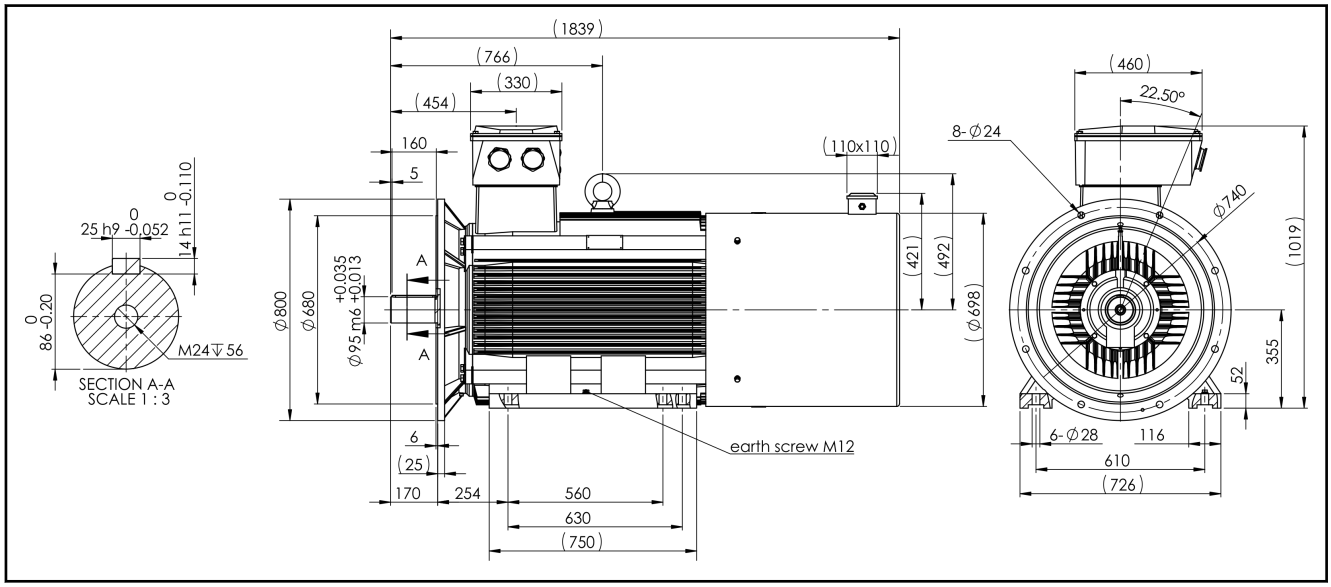

*Fig. 4-73: Specifications MOT-FC-EV2-B35-355M-4-5CB-**0250**-C3T-HOY*

4.25 Technical Data Frame Size 355L / 315 kW

4.25.1 Data Sheet

Designation	Symbol	Unit	MOT-FC 355L / 315 kW
Rated power	P_N	kW	315.00
Rated torque	M_N	Nm	2,025.0
Rated current	I_N	A	535.0
Rated frequency	f_N	Hz	50.0
Rated voltage	U_N	V	400
Winding interconnection	-	-	D
Rated speed	n_N	min^{-1}	1,480
Performance factor	cosφ	-	0.90
Efficiency at 100%-load	η_{100}	-	0.95
Efficiency at 75%-load	η_{75}	-	0.95
Efficiency at 50%-load	η_{50}	-	0.94
Maximum torque	M_{max}	Nm	4,450.0
Maximum current	I_{max}	A	1,330.0
Maximum velocity	n_{max}	min^{-1}	2,200
Mechanical parameters			
Number of pole pairs	o	-	2
Bearing A-side	-	-	6322/C3
Bearing B-side	-	-	6322/C3 CIB
Moment of inertia of the rotor	J_{rot}	kg * m²	11.1000000
Mass	m_{mot}	kg	1,830.0
Sound pressure level	L_P	dB[A]	82
Cable gland at terminal box	-	mm	M72 x 2.0 (2x)
Terminal board bolts	-	mm	M16
Ø-clamping range of connection clamps	-	mm	48 ... 60
			Latest amendment: 2014-08-05

Tab. 4-24: Technical Data Frame Size 355L / 315 kW

Technical Data

4.25.2 Frame Size 355L / 315 kW Specifications

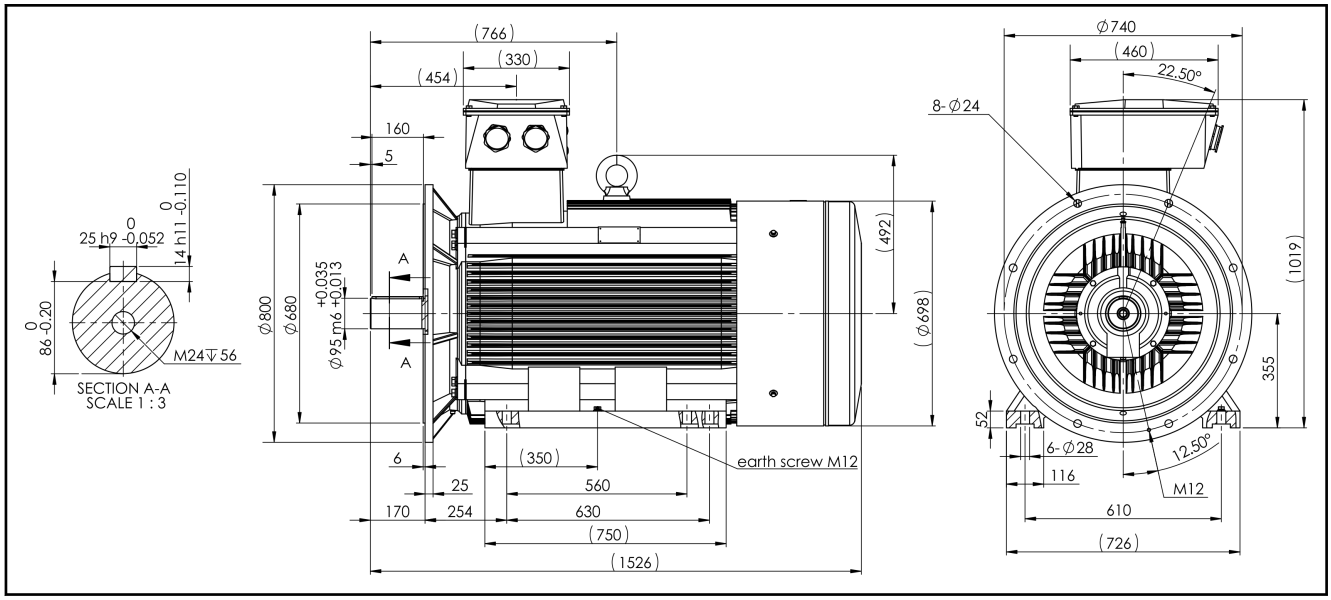

*Fig. 4-74: Specifications MOT-FC-ET2-B35-355L-4-5CB-**0315**-C3T-HOY*

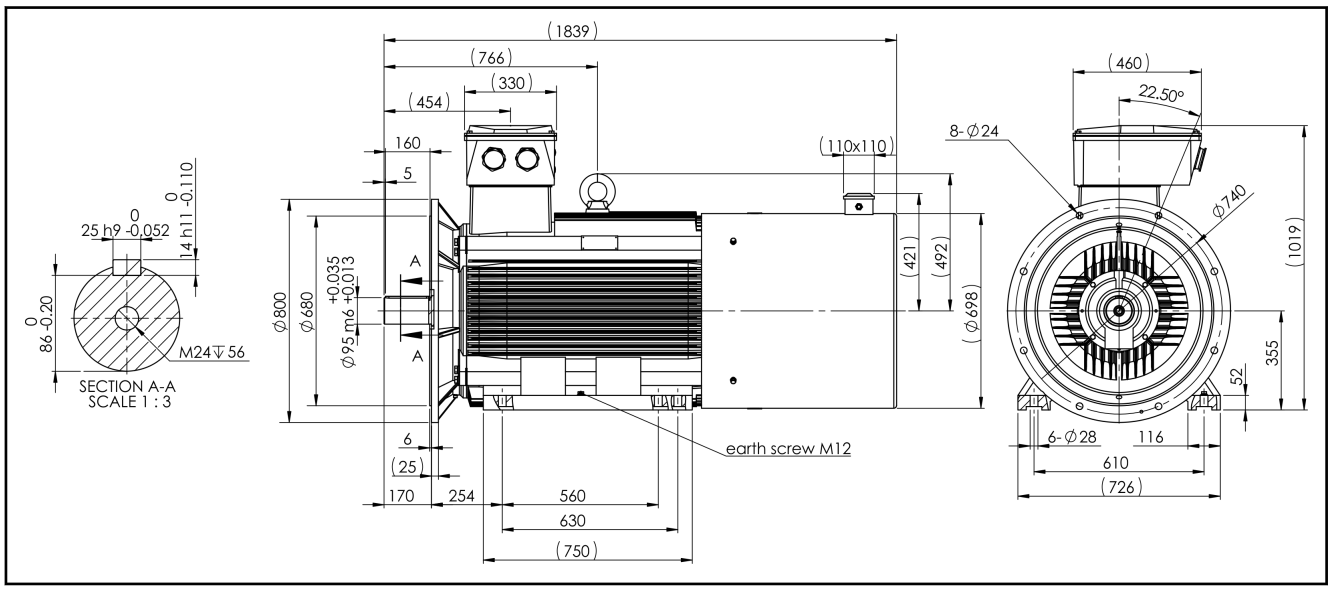

*Fig. 4-75: Specifications MOT-FC-EV2-B35-355L-4-5CB-**0315**-C3T-HOY*

5 Connection Technology

5.1 General Information

5.1.1 General Information

The following work must be done by qualified personnel according to the local regulations.

⚠ WARNING **Danger! Electric voltage! Operations in the vicinity of live parts are extremely dangerous.**

Work required on the electric system may only be carried out by skilled electricians. Tools for electricians (VDE tools) are absolutely necessary.

Prior to commencing work:

1. Isolate (even auxiliary circuits)
2. Protect the system or plant against being restarted
3. Ensure de-energization
4. Ground and short-circuit
5. Cover or shield any adjacent live parts

Before starting to work, check with an appropriate measuring device whether parts of the system are still under residual voltage (e.g. caused by capacitors, etc.). Wait for their discharging time.

Power connection

Before connecting the motor, check whether the power supply and power frequency consist with the nominal data. Motors can be operated with a power supply deviation of ± 5 % and a power frequency deviation of ± 2 % (acc. to IEC60034-1). A connection overview for power and accessory connections (PTC) can be found within the terminal box. The connections must be established such that a permanent safe electrical connection is ensured. This is also valid for power, grounding and shield connection.

Power cables

Power cables for motor connection are not in the scope of delivery of the motor. Selection and assembly of suitable cables must be done by the customer.

When selecting cables, please proceed very carefully and observe the requirements existing at the installation space of the cables.

Observe features, like

- resistance against coolants and lubricants from machining
- compliance of EMC directives
- fatigue limit
- non-halogen

We recommend to do crimping connections according to IEC 60352-2. Malfunctions or damage due to wrong or improper motor connection are not in the liability of Bosch Rexroth.

5.1.2 Connection Overview

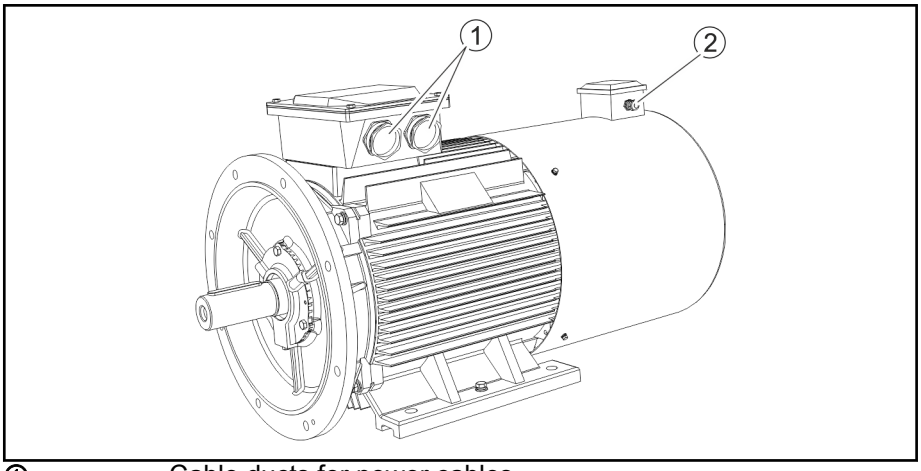

① Cable ducts for power cables
② Temrinal boxes with cable ducts for motor fan connection (only available for forced ventilated motors)

Fig. 5-1: Connection overview

5.2 Power Connection

5.2.1 Power Cable Connection

Ensure a clean and dry terminal box. Seal not used cable ducts. Before re-assembly, check the position and correct seat of the terminal box sealing.

To connect the motor, use a specified power cable. This must be ordered and assembled by the customer.

1. First, determine the correct wire lengths. Therefore, open the terminal box and remove the protective cap of the cable gland.
2. Insert the cable through the cable gland up to the furthermost terminal. Mark the cable on the entry within the terminal box.
3. Pull out the cable of the terminal box and remove the cable jacket up to this mark.
4. The exposed cable shield must be split acc. to chapter chapter 5.2.2 "Connection Total Shield Power Cable" on page 82. All further working steps about shield assembly can be done immediately or after this procedure.
5. The now accessible wires are fastened with ring terminals on the terminal stud. Strip the wires according to the size of ring terminals. The size of ring terminal depends on the diameter of the terminal stud. For the diameter of the terminal stud and the tightening torques refer to the data sheet of the motor under chapter 4 "Technical Data" on page 17.

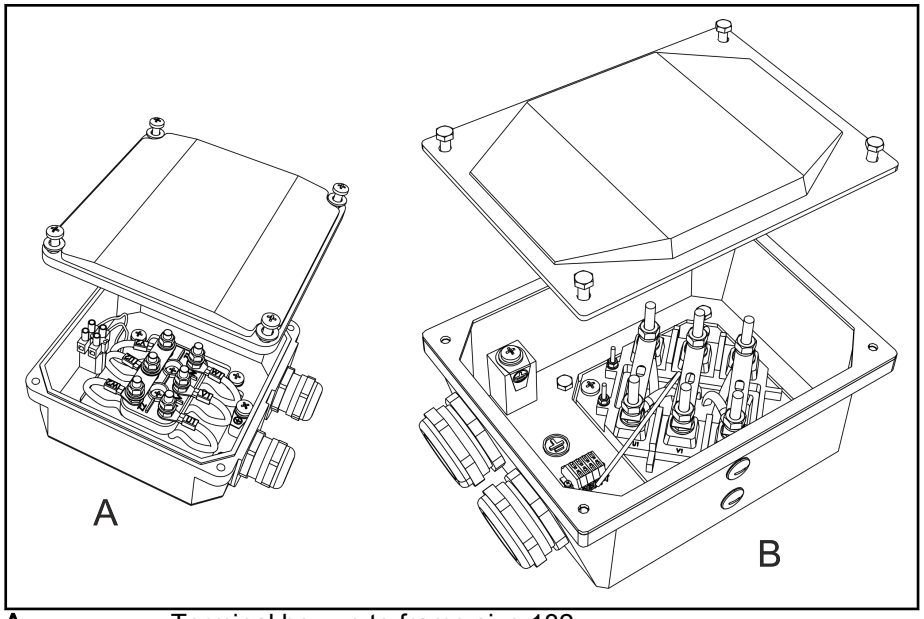

A	Terminal box up to frame size 132
B	Terminal box up to frame size 160

Fig. 5-2: Preparation power connection

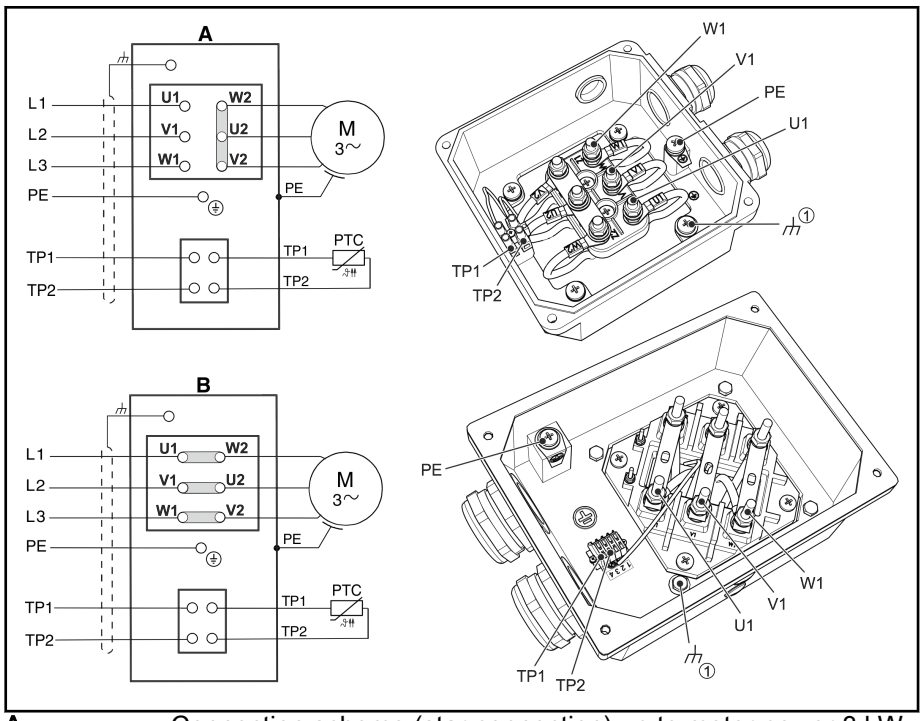

A	Connection scheme (star connection) up to motor power 3 kW
B	Connection scheme (star connection) up to motor power 4 kW
U1 / V1 / W1	Primary winding
PE	Ground terminal connection
TP1 / TP2	Connection wires of temperature sensor SNM150
① ⇒ shield	See also chapter 5.2.2 "Connection Total Shield Power Cable" on page 82.

Fig. 5-3: Connection designation within terminal box

☞ A lable with the connection scheme of the motor is applied on the inner side of the terminal box lid.

5.2.2 Connection Total Shield Power Cable

When connecting the power cable, please observe to apply the total shield of the power cable within the terminal box to keep a HF-suitable connection.

Therefore, connect the shield via a ring terminal and a screw with the terminal box. A connection screw is provided within the terminal box (refer to fig. 5-3 "Connection designation within terminal box" on page 81) to connect the shield.

☞ Rexroth does not offer ready-made power cables to connect these motors. The professional assembly of the power cable must be done by the customer.

The following overview describes working steps which must be done to apply a ring terminal on the total shield of the power cable. Application of ring terminal onto power wires is not described in this example.

1. Remove the jacket of the power cable.

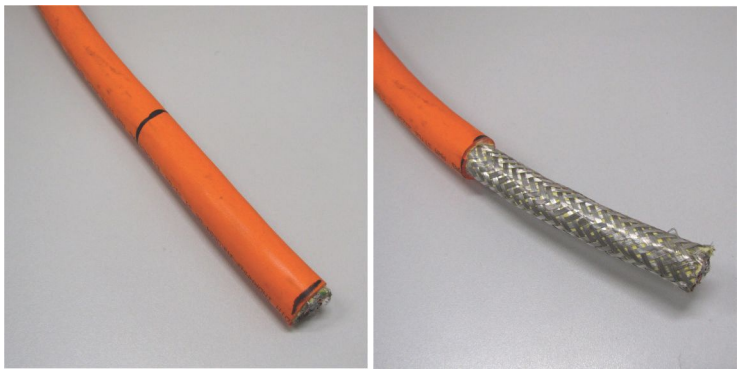

Fig. 5-4: Strip the power cable for required wire lengths.

Determine the necessary wire lengths by means of the junction within the terminal box of the motor to be connected. The unshielded cable must be kept as short as possible.

☞ Please observe that the stripped wires

- are not too long to avoid unnecessary kinks or chafes within the terminal box.
- are not too short to avoid tensile strength onto the wires after connecting within the terminal box.

2. Split the total shield of the cable braid open.

Fig. 5-5: Split the shield braid open

Split the shield braid open very carefully via the complete, stripped length.

3. Twist the total shield of the cable, cut it and solder it with the prepared cable. The cable cross section must be conform with the shield cross section. Then, strip the junction and the area of the shield connection with a heat shrink tubing.

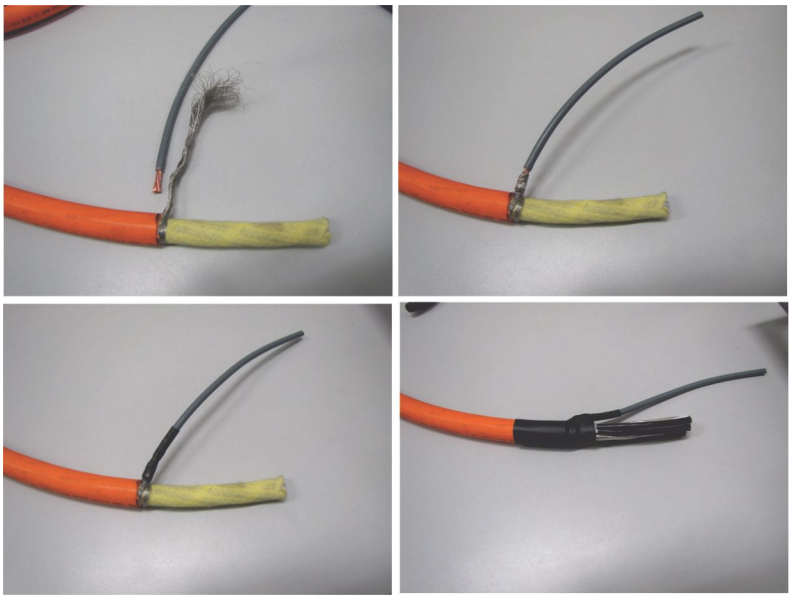

Fig. 5-6: Connection total shield with cable extension

4. Cut the soldered cable accordingly and finally assemble the correct ring terminal with a crimping tool.

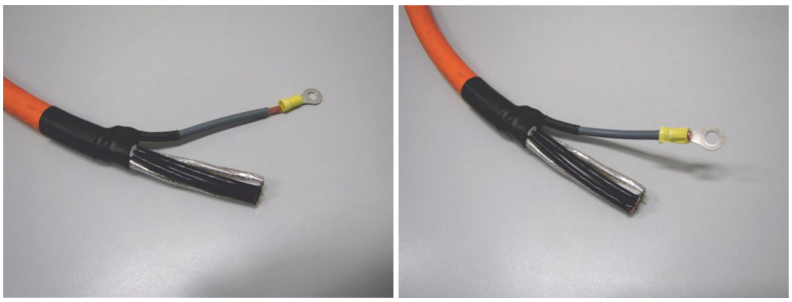

Fig. 5-7: Cut shield extension in a suitable way and assemble the ring terminal

5.2.3 Connection Temperature Sensor

To protect the motor from thermal overload, the temperature sensor for motor protection must be connected to the drive controller. Observe the connection designation under fig. 5-3 "Connection designation within terminal box" on page 81 and the notes about temperature sensor under chapter 6.9 "Motor Temperature Monitoring" on page 93.

5.3 Connection of Motor Fan

Cooling of forced-ventilated motors (design IC416) is done via an electrical fan which is mounted and separately connected onto the motor. It is operated with 230 V (star connection) or 400 V (delta connection). The fan is factory-adjusted designed for 400V.

The electrical connection is done by means of fan terminal box on the fan housing (see fig. 5-1 "Connection overview" on page 80). Additionally, the connection scheme is figured within the lid of the fan terminal box and shows the connection for 230V and 400V. The interconnection is factory-adjusted designed for 400V.

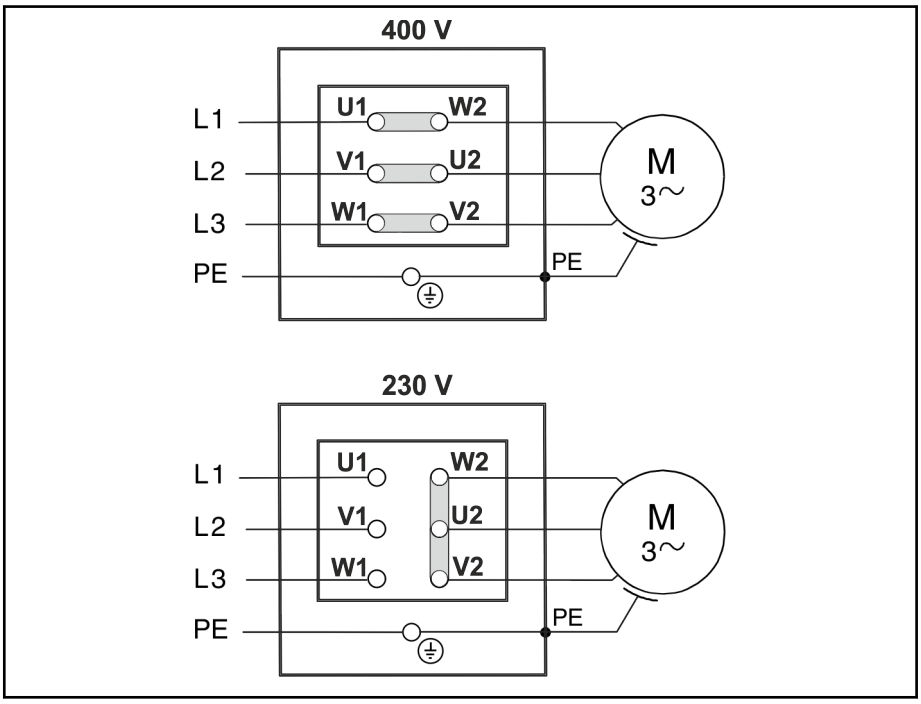

Fig. 5-8: Connection scheme motor fan

The following table contains electrical power data of the motor fan with different frame sizes.

Frame size	Power [W]	Current [A]	Voltage [V]	Frequency [Hz]	Interconnection
090	30	0.1	400	50	Y
100	45	0.15			
112	50	0.21			
132	90	0.4			
160	90	0.4			
180	180	0.65			
200	350	0.83			
225	350	0.83			
250	370	1.17			
280	550	1.57			
315	750	2.03			
355	1100	2.9			

Tab. 5-1: Electric parameters of motor fans

6 Application Notes

6.1 Setup Elevation and Ambient Conditions

The MOT-FC motors performance data specified are applicable for

- Ambient temperatures -20 ... +40 °C
- Setup elevation 0 … 1,000 m above sea level

Different conditions lead to a departing of the data according to the following diagrams. Do occur deviating ambient temperatures and higher installation altitude at the same time, both utilization factors must be multiplied.

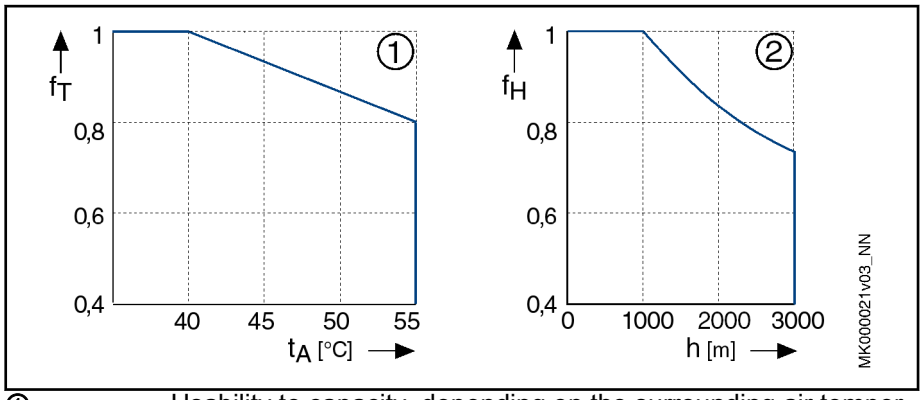

①	Usability to capacity, depending on the surrounding air temperature
②	Usability to capacity, depending on the installation altitude
f_T	Temperature utilization factor
t_A	Ambient temperature in degrees Celsius
f_H	Height utilization factor
h	Installation altitude in meters

Fig. 6-1: Derating of ambient temperature, installation altitude (in operation)

Calculation of performance data in case the limits specified are exceeded:

Ambient temperature > 40 °C

$M_{0\_red} = M_0 \times f_T$

Iinstallation altitude > 1,000 m

$M_{0\_red} = M_0 \times f_H$

Ambient temperature > 40 °C and **setup elevation > 1,000 m**

$M_{0\_red} = M_0 \times f_T \times f_H$

☞ The details for the utilization depending from the installation altitude and environmental temperature do not only apply to the motor , but on the whole drive system, consisting of motor, drive controller and mains supply. Ensure that your application does not exceed the reduced values. You can find further information and data in the documentation of the respective components.

6.2 Ambient Conditions

Environmental conditions are defined according to DIN EN 60721-3-3 in different classes. They are based on long-term experiences and take all influencing variables into account, e.g., air temperature and air humidity.

Overview of allowed classes of ambient conditions according to DIN EN 60721-3-3 during operation

Classification type	Allowed class
Classification of climatic ambient conditions	3K2
Classification of biological ambient conditions	3B1
Classification of chemically active materials	3C2
Classification of mechanically active materials	3S2
Classification of mechanical ambient conditions	3M8

Tab. 6-1: Allowed classes of ambient conditions during operation

Based on DIN EN 60721-3-3, some limit values are partially defined in the following, which our products are allowed to be used during operation. Observe the detailed description of the classifications to take all of the factors which are specified in the particular class into account.

Allowed operation conditions

Environmental influences	Unit	Value
Air temperature	°C	-20 ... +40 (1)
Air humidity (relative)	%	5 ... 95
Air humidity (absolute)	g/m³	1 ... 29
max. temperature change velocity	°C/min	0,5
Occurence of salt mist		Not permitted 2)
Sand in air		Not permitted 3)

1) Deviating from class 3K2 of DIN EN 60721-3-3
2) Deviating from class 3C2 of DIN EN 60721-3-3
3) Deviating from class 3S2 of DIN EN 60721-3-3

Tab. 6-2: Operating conditions

Unless otherwise specified, the values given are the values of the particular class. However, Bosch Rexroth reserves the right to adjust these values at any time based on future experiences or changed ambient factors.

6.3 Degree of Protection

The motors conform with **protection mode IP55** acc. to DIN EN 60034-5. It must be ensured that the motor is never exposed to other environmental influences than the ones described within the protection modes.

⚠ CAUTION **Any failure to observe the degree of protection of the motor may damage or destroy the motor components or result in personal injury!**

The motors or components may only be used in environments where the degree of protection specified is adequate.

6.4 Frame Size and Installation Types

MOT-FC motors are available with frame size B5, V1 and B35. Please also refer to the data in the type code under tab. 3-1 "Type of construction acc. to IEC 60034-7" on page 13.

☞ In the case of vertical installation position of the motor, observe the limitations of bearing lifetime under chapter 6.10 "Bearing Lifetime" on page 94.

6.5 Motor Cooling and Installation Space

Dependend from their design are MOT-FC motors self ventilated (IC411) or forced ventilated (IC416). Ambient air is used to cool the motors. In both cases, air is sucked through the opening in the fan cowl and flows axially over the outer cooling ribs of the housing.

Self ventilation / cooling mode IC 411 acc. to IEC 60034-6

In the case of self ventilation , the fan propeller for the cooling air flow is fastened on the motor shaft. Thereby, the cooling efficiency depends on the motor speed.

☞ Check the cooling effect at speed control below nominal speed, in the case of frequent switch operation or high torque. In the case of non-sufficient cooling, use a forced ventilated motor.

Forced ventilation / cooling mode IC 416 acc. to IEC 60034-6

For forced ventilation , an axial fan, independent from the motor, is used. The cooling operates indepently from operation state and utilization of the motor.

The delivery volume of each fan is figured as follows:

Motor fan on frame size	Air volume [m³/h]	Sound pressure level [dB(A)]
090	500	65
100	650	67
112	980	67
132	880	69
160	609	72
180	686	72
200	1679	72

Application Notes

Motor fan on frame size	Air volume [m³/h]	Sound pressure level [dB(A)]
225	1786	74
250	1813	75
280	2415	78
315	2820	81
355	4000	86

Tab. 6-3: Air volume and sound pressure level of the motor fan (forced ventilated design)

☞ Please also observe the notes about connecting the motor fan chapter 5.3 "Connection of Motor Fan " on page 84.

Condition of cooling air

Dirty cooling air can reduce the flow rate of the fan and result in a thermal overload of the motors. If the motor is used in heavily areas, make special arrangements for motor protection to receive the system availability. Thus, observe a regular cleaning of fan and motor cooling ribs.

When designing the machine, provide for accessibility of the motor and fan for maintenance purposes.

It is explicitly prohibited to use the fan under the following conditions:

- Delivery of air which contains abrasive particles
- Delivery of air which has a strongly corroding effect, e.g., salt mist
- Delivery of air which contains a high dust load, e.g., extraction of saw dust
- Delivery of combustible gases/particles
- Use of the ventilator as a technical safety component or as a component assuming safety-relevant functions

Installation space

(see Fig. 6-3)

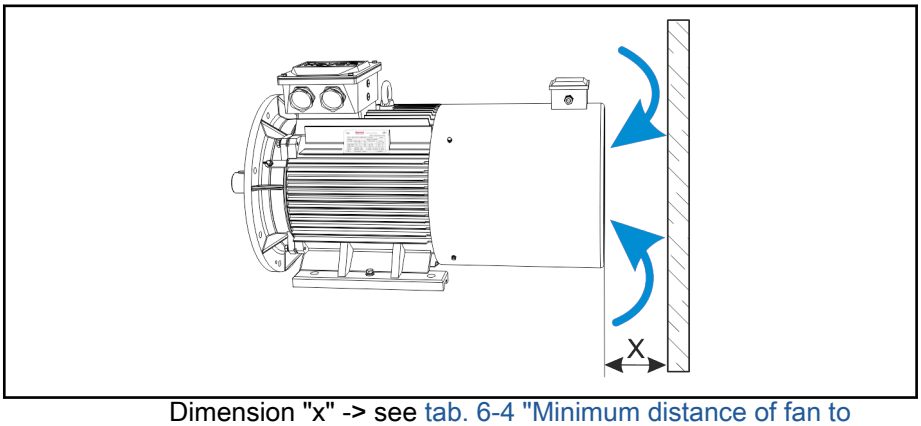

Dimension "x" -> see tab. 6-4 "Minimum distance of fan to neighboured components" on page 90

Fig. 6-2: MOT-FC ventilation

Frame size	Dimension "x" [mm]
90 ... 100	20
112	25

Frame size	Dimension "x" [mm]
132	30
160	40
180 ... 225	45
250	100
280 ... 315	110

Tab. 6-4: Minimum distance of fan to neighboured components

6.6 Output Shaft with Keyway

The keyway according to DIN 6885, Sheet 1, Edition 08-1968, allows form-locking transmission of torques with constant direction and low requirements for the shaft-hub connection.

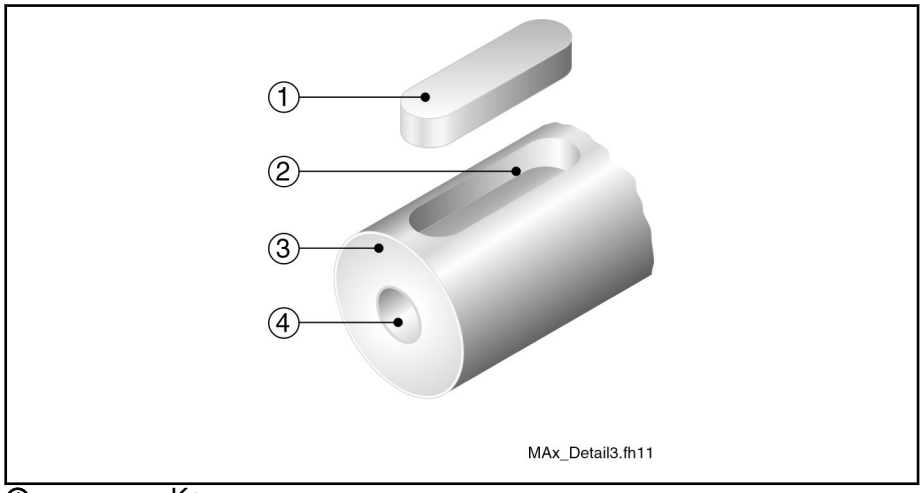

① Key
② Keyway
③ Motor shaft
④ Centering hole

Fig. 6-3: Output shaft with keyway

☞
- Reversing operation of the motor is not permitted.
- Deformations in the area of the keyway can lead to breakage of the shaft.
- ⇒ The keyway is included in the motor scope of delivery.

6.7 Balancing

MOT-FC motors are dynamically balanced and fulfill the limit value of DIN EN 60034-14.

The motor is balanced in free suspension brackets with a half keyway. The balancing quality corresponds oscillating quantity level A. Mass ratios are comparable to those of a plain shaft. The hub of a machine element to be driven (pinion, pulley, etc.) should correspond to the length of the keyway. Inserting a complete key results in an imbalance that must be compensated on the machine element that is to be driven.

⚠ CAUTION	**Safe the key from being ejected, if the motor is operated without mounted output element.**

- Please note that the vibration behavior of attached or driven machine elements can also generate reactions to the motor which lead to early wear or failure in unfavorable cases.
- Due to the system-specific influences on the vibration behavior of the overall system, the machine manufacturer must determine the specific circumstances. The vibration behavior of the motor and the machine elements should be taken into account as early as during the plant design phase.
- In certain cases, the machine elements to be driven must be balanced such that there will be no resonances or reactions on the total system or its components.

6.8 Compatibility With Foreign Matters

All Bosch Rexroth controls and drives are developed and tested according to the state-of-the-art technology.

As it is impossible to follow the continuing development of all materials (e.g. lubricants in machine tools) which may interact with the controls and drives, it cannot be completely ruled out that any reactions with the materials we use might occur.

For this reason, before using the respective material a compatibility test has to be carried out for new lubricants, cleaning agents etc. and our housings/ materials.

6.9 Motor Temperature Monitoring

The motors are provided with 3 temperature sensors, which are switched in a row, to protect the motor from overheating, These ceramic-PTC-resistors are integrated into the winding, one per phase.

Type	PTC SNM.150.DK.***
Rated response temperature ϑ_{NAT}	150 °C
Resistance at 25 °C	≈ 100 ... 250 ohms

Tab. 6-5: Motor protection temperature sensor

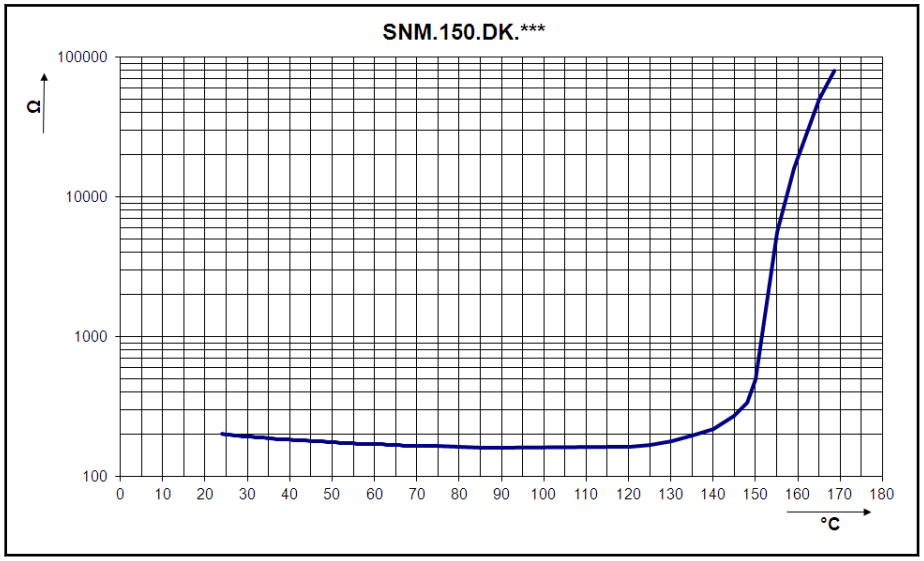

Fig. 6-4: Characteristics temperature sensor

Details about the connection of temperature sensors, please refer to chapter 5.2.3 "Connection Temperature Sensor" on page 84.

⚠ CAUTION **Failure in the machine or damage by improper use of the sensors!**

- The PTC sensors are no safety devices and are not suitable for integration into safety systems to protect persons or machines.
- The PTC sensors are neither designed nor suitable for registering the temperatures of housing, rotor or motor bearing. Additional temperature control requirements must be realized by the machine manufacturer.

6.10 Bearing Lifetime

General Information

The following is valid for motors with lifetime lubrication and for motors with regreasind device:

- Any operation outside of these specified ambient conditions reduces the bearing lifetime or grease lifetime.
- In the case of vertical installation position, the values specified in this chapter must be halved.
- Operation with a higher than the nominal speed reduced the bearing lifetime or grease lifetime. A doubling of the nominal speed leads to a reducing of about 50%, for example.
- The specified values in this chapter about bearing lifetime and grease lifetime must be halved at every temperature rise of 15 K, relating to an ambient temperature of 25 °C.

The grease service life (t_f) is defined as the time from the point when the bearing is started until it fails as a result of lubrication failure. Unfavorable operating and ambient conditions reduce the grease service life. When the grease service life to be expected ($t_{fq)}$ is determined, it is therefore absolutely necessary that certain reduction factors for unfavorable operating and ambient conditions be taken into account for each single case of application. Please observe the details of FAG Kugelfischer AG publication No. WL 81 115/4 DA.

Bearing with lifetime lubrication

For details about bearing size and type refer to the type plate. Standardly, the motors up to frame size 225 have a bearing with lifetime lubrication.

The typical bearing lifetime is related onto operation at nominal speed. Therwith, the following values are reached:

Frame size	Typcial lifetime [h]
90 ... 160	40000
180	35000
200	27000
225	23000

Tab. 6-6: Typcial bearing lifetime at lifetime lubrication and mains operation

Bearing with relubrication equipment

Refer to the information about this bearing mode at chapter 9.6.3 "Bearing with Relubrication Equipment" on page 105.

6.11 Attachment of Drive Elements

6.11.1 General Information

Whenever attaching drive elements to the output shaft, such as

- Gearboxes
- Coupling
- Pulley
- Pinions

it is absolutely necessary that the following guidelines be followed.

6.11.2 Gears

Gearbox mounting on motors

NOTICE	Ingressing fluid may damage the motor!

Fluids (e.g., cooling lubricants, gear oil, etc.) may not be present at the output shaft. When gears are attached, only gears with a closed (oil-tight) lubrication system may be used.

Are gearboxes mounted on motors, the thermal coupling of the motors on machines or constructions changes.

Depending on the gearbox type, the heat development on the gearbox is different. The heat dissipation of the motor via the flange is changed in every case when a gearbox is mounted. This must be heeded at the project planning.

A reduction of the specified motor power data by 10 ... 20 % is necessary, to do not overload motors when using gearboxes.

☞ For more information and requirements refer to the documentation of the respective gearbox manufacturers.

6.11.3 Couplings

The machine construction and the drive elements used must be carefully adapted to the motor type so as to make sure that the load limits of the shaft and the bearing are not exceeded.

☞ When extremely stiff couplings are attached, the radial force which constantly changes the angular position may cause an impermissibly high load on the shaft and bearing.

6.11.4 Driving Pinions

Bevel gear pinion or helical gear drive

Owing to thermal effects, the flange-sided end of the output shaft may shift by 0.6 mm in relation to the motor housing. If helical drive pinions or bevel gear pinions directly attached to the output shaft are used, this change in position will lead to

- a shift in the position of the axis, if the driving pinions are not defined axially on the machine side,
- a thermally dependent component of the axial force, if the driving pinions are defined axially on the machine side. This causes the risk of exceeding the maximum permissible axial force or of the play within the gears increasing to an impermissible degree.

- Damage of the motor bearing on the B-side due to exceeding of the maximum permissible axial force.

☞ In such cases, drive elements should preferably be used with their own bearings which are connected to the motor drive shaft via axially compensating couplings.

6.11.5 Overdefined Bearing

Generally, redundant bearings are to be avoided by all means when connecting drive elements. The tolerances inevitably present in such cases will lead to additional forces acting on the bearing of the motor shaft and, where applicable, to a considerably reduced service life of the bearing and/or to fatigue transverse rupture/vibration rupture of the motor shaft.

☞ If overdefined attachment cannot be avoided, it is absolutely necessary that Bosch Rexroth be consulted.

6.12 Certifications

RoHS Conformity

For all IndraDyn E motors and components, Bosch Rexroth ensures conformity, according to EG directive 2011/95/EG to limit the use of certain dangerous materials in electro and electronic devices.

Declaration of Conformity

Certificate of conformity certifying the structure of and the compliance with the valid EN standards and EC guidelines are available for all IndraDyn E motors. For declaration of conformity please refer to chapter 11.1 "Declaration of Conformity" on page 115.

The CE mark is applied to the motor type label of the motors.

CE

Fig. 6-5: CE mark

7 Transport and Storage

7.1 Delivery Status and Packaging

IndraDyn E motors are delivered in wooden crates or in cartons. Packing units on pallets are secured by means of retaining straps.

The motor shaft is provided with a protective sleeve, ex works. Remove these protective sleeves only immediately before starting with motor assembly.

⚠ CAUTION **When being cut open, the retaining straps may make uncontrolled movements which may result in injuries.**

Maintain a sufficient distance and carefully cut the bandages.

The total scope of a delivery is specified on the delivery or consignment note. However, the contents of a delivery may be distributed over several packages. Each individual package can be identified using the shipment label attached to the outside. In addition, each device has an individual name plate containing the device designation and technical data.

☞ After having received the goods, compare the ordered and the supplied type. Immediately complain about any deviations.

7.2 Transport and Storage

7.2.1 General Information

NOTICE **Damage or injuries and loss of the warranty due to improper handling!**

- Protect the products against moisture and corrosion.
- Avoid putting the products under mechanical load. Do not throw, tilt or drop the products.
- Only use lifting equipment suitable for the weight of the motor.
- Never lift the motor by the fan housing.
- Use suitable protective devices and wear protective clothing when transporting the device.

7.2.2 Transport Instructions

To protect the motor against dirt, dust, etc., Bosch Rexroth recommends to transport the motor in its original packaging

- until it has reached its intended installation site and
- until it is actually installed into the machine.

in the packaging in which it has been delivered from Rexroth.

To lift the motor out of the transport crate or to install it into the machine, use the transport or lifting eye bolts at the motor.

The ring screws are designed acc. to DIN 580. Before each transport, ensure that the lifting eye bolts are screwed down fully to the stop face and that your selected lifting equipment and lifting method will not overload the lifting eye bolts.

⚠ CAUTION **Injuries due to improper handling during transport of motors!**

Do only use suitable lifting devices (e.g. lifting sling belts, eyebolts, chain suspension ...).

Use protective equipment and personal protective clothing (gloves, safety shoes, ...).

Never lift the motors on the optional fan housing.

Never walk under hanging loads.

Based on DIN EN 60721-3-2, the table below specify limit values which are allowed for our products while they are transported by land, sea or air.

Environmental factor	Symbol	Unit	Value
Temperature	T_T	°C	-25 ... +60
Air humidity (relative air humidity, not combinable with quick temperature change)	φ	%	75 (at +30 °C)
Occurence of salt mist			Not permitted [1)]

1) Deviations from DIN EN 60721-3-2 (class 2C2)

Tab. 7-1: Allowed transport conditions

7.2.3 Storage Instructions

Storage conditions

Generally, Bosch Rexroth recommends to store all components until they are actually installed in the machine as follows:

- In their original package
- At a dry and dustfree location
- At room temperature
- Free from vibrations
- Protected against light or direct insolation

On delivery, protective sleeves and covers may be attached to our motors. They must remain on the motor for transport and storage. Do not remove these parts until shortly before assembly.

Based on DIN EN 60721-3-1, the tables below specify classifications and limit values which are allowed for our products while they are stored. Observe the detailed description of the classifications to take all of the factors which are specified in the particular classification into account.

Allowed classes of ambient conditions during storage acc. to DIN EN 60721-3-1

Classification type	Class
Classification of climatic ambient conditions	1K2
Classification of biological ambient conditions	1B1
Classification of chemically active materials	1C2
Classification of mechanically active materials	1S1
Classification of mechanical ambient conditions	1M2

Tab. 7-2: Allowed classes of ambient conditions during storage

You can find a list of significant environmental influences of the aforementioned classifications in the following table. Unless otherwise specified, the values given are the values of the particular class. However, Bosch Rexroth reserves the right to adjust these values at any time based on future experiences or changed ambient factors.

Environmental condition classes allowed for storage according to DIN EN 60721-3-1

Environmental factor	Symbol	Unit	Value
Air temperature	T_L	°C	+5 ... +40
Relative air humidity	φ	%	5 ... 85
Absolute air humidity	ρw	g/m³	1 ... 25
Condensation	- -	- -	Not allowed
Ice formation/freezing	- -	- -	Not allowed
Occurence of salt mist	- -	- -	Not allowed [1)]

1) Deviations from DIN EN 60721-3-1 (class 1C2)

Tab. 7-3: Allowed storage conditions

Motor storage times

Additional measures must be taken on commissioning to preserve proper functioning – irrespective of the storage time which may be longer than the

warranty period of our products. However, this does not involve any additional warranty claims.

☞ The storage duration of the motors reduces the remaining grease lifetime. This leads to a significant reducing of the specified bearing lifetime for lifetime lubricated bearings. We recommend to exchange the bearing or grease after a storage time of 12 months, after 48 months at the latest. To keep the grease lifetime of the motor bearings, the motors should not be stored longer than 2 years at a room temperature (+5 °C to +40 °C).

Storage time	Measures for commissioning
< 2 years	1. Check the electric contacts to verify that they are free from corrosion 2. Manually turn the motor shaft in regular distances (min. 1x per year) to spread the grease consistently. 3. Running in the motor without load at startup
> 2 years	Additonally, in the case of a storage time of more than 2 years, change the motor bearings.

Tab. 7-4: Measures before commissioning motors that have been stored over a prolonged period of time

8 Assembly

8.1 General Information

The motor is balanced with a half keyway. Ensure that the same is valid for the drive components. A correct balancing is decisice to avoid vibrations, bearing and shaft damage.

Make sure that the drain opening and the locking screws show downwards. We recommend to open the drain opening on the motors which are in the outer area and are not 24/7 operated.

Before motor assembly, manually turn the motor shaft one complete rotation to ensure an unhindered rotation. Therefore, remove the affixed transport locking device.

⚠ CAUTION	**The key is secured only against falling out during transport. If you take the motor / the machine into operation without a mounted drive element, prevent the key from projecting.**

Before and during assembly observe

- a sufficient stability of the construction and a clean and plane screw-on surface
- the center line of the motor shaft is aligning to the center line of the machine elements to be driven. To align the motor, use sheet steel strips, attenuation elements or the like.
- the right rotational direction of the motor in uncoupled state
- that you do not create a resonance with a rotation frequency and the double mains frequency, due to the assembly situation.

An assembly or disassembly of drive components (pulleys, couplings, etc.) should only be done with suitable tools.

☞ Hits onto the output shaft are not allowed, as bearing failures can occur.

Heed the supplementary notes regarding key under chapter 6.6 "Output Shaft with Keyway" on page 91.

After mechanical fastening of the motor, do the electrical connection. See also chapter 5 "Connection Technology" on page 79.

8.2 Motor Fastening

The motor must be professionally and safely fastened on the machine by observing the aforementioned notes. To fasten the motor, use all provided fastening holes. Use screws of minimum property class 8.8 and related washers acc. to DIN EN 28738. You will find detailed notes about position, size and quantity of the fastening holes in the dimension sheet to the motor in chapter 4 "Technical Data" on page 17. The necessary screw length or screw-in depth of the fastening screws must be specified under observance of the conditions on the installation place of the motor.

☞ The screwed connections must be able to take up both the force due to the weight of the motor and the forces acting during operation.

9 Commissioning and Operation

9.1 Commissioning

9.1.1 General Information

NOTICE **Property damage caused by errors while controlling motors and moving parts! Unclear operating states and product data!**

- Do not commission the motors if connections, operating states or product data are unclear or faulty.
- Do not commissiong the motors if safety devices and monitoring units fo the plant are damaged or not in operation.
- Damaged products must not be put into operation.
- Contact Bosch Rexroth if you need additional information or support during commissioning.

9.1.2 Preparation

1. Have the documentation of all products used ready at hand.
2. Record all measures taken in the commissioning log.
3. Check the products for damage.
4. Check all mechanical and electrical connections.
5. Activate the safety and monitoring equipment of the system.

9.1.3 Procedure

Once all requirements are met, proceed as follows:

1. For forced ventilated motors: Switch on the motor fan and check the proper function
2. Commission the drive system according to the instructions of the corresponding product documentation. You can find the respective information in the functional description of the drive control devices.
3. Record all measures taken in the commissioning log.

☞ Sometimes, additional steps may be required for commissioning controllers and control units. Testing the functionality and performance of the machine is not a part of the motor start-up. This must be done during total start-up of the machine. Observe the machine manufacturer's specifications and instructions.

9.2 Start-up at Mains Operation

Refer to the information about electrical connection under "Power connection" on page 79.

9.3 Deactivation with Drive Controller

In case of malfunctions or maintenance measures, or to decelerate the motors, proceed as follows:

1. Observe the instructions in the machine documentation.

2. Use the machine-side control commands to bring the drive to a controlled standstill.
3. Switch off the power and control voltage of the controller.
4. Switch off the motor protection switch for the motor fan.
5. Switch off the main switch of the machine.
6. Secure the machine against accidental movements and against unauthorized operation.
7. Wait until the discharge time of the electrical systems has elapsed and then disconnect all electrical connections.
8. Before dismounting the motor and, if applicable, the fan unit, secure them to ensure they cannot drop or move, and detach mechanical connections only thereafter.
9. Record all measures taken in the commissioning log.

9.4 Deactivation at Mains Operation

In case of malfunctions or maintenance measures, or to decelerate the motors, proceed as follows:

1. Observe the instructions in the machine documentation.
2. Switch off the main switch of the motor.
3. Switch off the motor protection switch for the motor fan.
4. Secure the machine against accidental movements and against unauthorized operation.
5. Before dismounting the motor and, if applicable, the fan unit, secure them to ensure they cannot drop or move, and detach mechanical connections only thereafter.
6. Record all measures taken in the commissioning log.

9.5 Disassembly

⚠ WARNING **Fatal injury due to errors during the activation of motors or work on moving elements!**

- Work on machines is only allowed if they are secured and while they are not running.
- Before starting to eliminate the failure, switch off the motor, the controller and the machine and wait until the discharge time of the electrical systems has elapsed.
- Before starting disassembly, secure the machine against unforeseeable movements and against unauthorized operation.
- ⇒ Before dismounting the motor and power supply, secure them against dropping or movement before detaching the mechanical connections.

To disassemble the motor from the machine, do the following steps:

1. Observe the instructions in the machine documentation.
2. Observe the safety instructions and carry out all steps as described above in Section "Deactivation".
3. Remove the motor from the machine and store the motor properly.

4. Document all executed measures in the commissioning report and the machine maintenance plan.

9.6 Maintenance

9.6.1 General Information

Control the motor in regular distance. Electrical and mechanical connections must be checked in regular distances on firm seat. Check the state of the shaft sealing and if necessary, replace it. Keep the motor clean and ensure an unhindered ventilation air flow.

9.6.2 Maintenance Measures

Increase availability with regular preventive maintenance measures. Observe the machine manufacturer's instructions in the machine maintenance plan and the maintenance measures described below.

⚠ WARNING **Danger of injury due to moving elements! Danger of injury due to hot surfaces!**

- Do not carry out any maintenance measures while the machine is running.
- Before starting maintenance, switch off the controller and the machine and wait until the discharge time of the electrical systems has elapsed.
- While carrying out maintenance work, secure the machine such that it cannot restart or be used by unauthorized persons.
- Do not work on hot surfaces.

Bosch Rexroth recommends the following maintenance measures, based on the maintenance plan of the machine manufacturer:

Measure	Interval
Check the motor fan and the air circulation for proper functioning.	According to the specifications in the machine maintenance plan, but at least every 1000 operating hours.
Check the mechanical and electrical connections.	According to the specifications in the machine maintenance plan, but at least every 1000 operating hours.
Check the machine for smooth running, vibrations and bearing noise.	According to the specifications in the machine maintenance plan, but at least every 1000 operating hours.
Remove dust, chips and other dirt from the motor housing, cooling fins and the connections.	Depending on the degree of soiling, but after one operating year at the latest.

Tab. 9-1: Maintenance measures

9.6.3 Bearing with Relubrication Equipment

Motors from frame size 250 are provided with a relubrication system. To relubricate, use upscale lithium komplex grease, NNGI quality 2 or 3 with a temperature range of -40 bis +150 °C.

The specified relubrication intervals are based on an ambient temperature of 25 °C. At each increase of the motor bearing temperature of 15 K, halve the

values. Even operation with higher speed, e.g. as frequency converter drive, requires shorter relubrication intervals. By doubling of the nominal speed, the intervals reduce typically about 50 %.

Lubricate the motor during operation. Therfore, open the locking screw on the grease outlet and let the motor run for 1-2 h before you bring on the re-lock the screw on the grease outlet. For the necessary grease mount refer to the following table.

Frame size	Relubrication intervals [h]	Grease amount [g]
160 ... 180	7000	20
200 ... 225	6500	25
250 ... 280	6000	35
315	5500	50
355	4000	60

Tab. 9-2: Relubrication intervals relating on rated speed and ambient temperature 25 °C

☞ Grease the motor at start-up, first.

9.6.4 Motor Fan

General Information

There may be cases when the fan unit must be dismounted for maintenance measures or troubleshooting. This work may only be carried out by skilled personnel.

⚠ CAUTION **Immediately after the motor has been operated, high temperatures must be expected on the motor housing! Risk of burns!**

- Ensure adequate contact protection and wait until the motor has cooled down.
- Ensure that there are no combustible and flammable materials in the environment of the hot fan.

⚠ CAUTION **While voltage is applied, the motor restarts automatically, e.g., after a power failure. Risk of injuries!**

- Do not stay within the danger zone of the machine.
- When working on the motor, switch off the line voltage and ensure that it cannot be reactivated.
- Wait until the motor is in standstill

⚠ WARNING **Rotating part!**

If coming into contact with rotor or impeller, body parts may be crushed! Risk of injuries!

- Secure the danger point against touch
- Before starting work on the plant/machine, wait until all parts have come to a standstill.
- Do not wear jewels or loose or dangling garments when working on moving parts.
- Wear a cap to protect long hair.

General Fan Maintenance Steps:

1. Switch off the machine and disconnect the electrical fan connection.
2. Before loosening the fastening screws, make sure the fan unit does not drop; carefully remove the fan unit from the motor.
3. Reattach the fan unit after having cleaned or visually inspected the motor or after troubleshooting (see guidelines below). Secure the fastening screws with liquid screw locking (e.g. LOCTITE 243) and do the connections again.
4. Check the motor fan and the air circulation for proper functioning.
5. Log all maintenance measures in the machine maintenance plan.

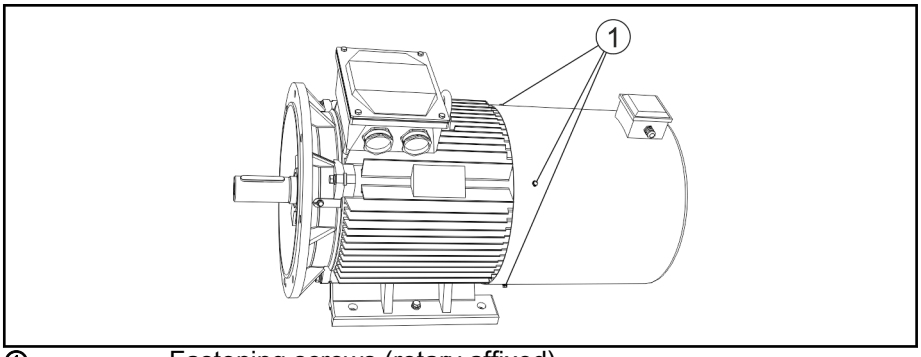

① Fastening screws (rotary affixed)

Fig. 9-1: Example of MOT-FC motor (forced-ventilated design)

Required visual inspections of the fan

Inspection	Interval
Line insulation	As specified in the machine maintenance schedule, however, at least every 6 months
Attachment of connecting lines	
Lining of contact protection	
Ventilator for damage	
Attachment of ventilator	

Tab. 9-3: Visual fan inspection

Troubleshooting guidelines

Failure/fault	Possible cause	Possible action
Fan motor not running	Mechanical blockage	Switch off and de-energize the motor and remove the mechanical blockage.
	Wrong line voltage	Check the line voltage and reestablish voltage supply.
	Faulty connection	Correct the connection.
	Motor winding interrupted	Exchange the device.
Impeller running untrue	Imbalance of rotating parts	Clean the device. If there is still an imbalance after cleaning, exchange the device.
Overtemperatur of fan motor	Surrounding air temperature too high	If possible, reduce the surrounding air temperature.
	Unallowed operating point	Check the operating point.
	Inadequate cooling	Improve the cooling system.
Please contact your Rexroth sales partner in case of other failures.		

Tab. 9-4: Troubleshooting guidelines

9.7 Troubleshooting

9.7.1 General Information

⚠ WARNING **Danger of injury due to moving elements! Danger of injury due to hot surfaces!**

- Do not carry out any maintenance measures while the machine is running.
- ⇒ Switch off the controller and the machine and wait until the discharging time of the electric systems has elapsed before starting trouble-shooting.
- While carrying out maintenance work, secure the machine such that it cannot restart or be used by unauthorized persons.
- Do not work on hot surfaces.

Possible causes for the malfunctioning of IndraDyn E-motors can be limited to the following areas:

- Motor fan function and temperature behavior
- Internal temperature sensor
- Mechanical damage of the motor
- Mechanical connection to machine

The following sections describe some failure states with possible causes by way of example. This list is not exhaustive.

9.7.2 Motor Fan Does not Work Correct

Observe the notes regarding trouble-shooting on the motor fan under tab. 9-4 "Troubleshooting guidelines" on page 108.

9.7.3 Excessive Temperature of Motor Housing

State The housing temperature of the motor rises to unusually high values.

Possible causes

1. Failure or fault in the fan or cooling system.
2. The original operating cycle has been changed.
3. The original motor parameters have been changed.
4. Motor bearings are worn or defective.

Measures

1. Check the functioning of the fan. Clean as required. Contact Bosch Rexroth Service in case of a failure.
2. Check the layout of the drive for changed requirements. Stop operation in case of overload. Risk of damage!
3. Restore the original parameters. Check the layout of the drive if requirements have been changed.
4. Contact the machine manufacturer.

9.7.4 Motor or Machine Table Generates Vibrations

State Vibrations can be heard or felt on the motor.

Possible causes

1. Driven machine elements are insufficiently coupled or damaged.
2. Motor bearings are worn or defective.
   Available bearing lifetime or grease lifetime has elapsed.
3. Motor mount has come loose.
4. Drive system is instable from a control point of view.

Countermeasures

1. Contact the machine manufacturer.
2. Contact the machine manufacturer.
3. Check the mechanical connection. Do not continue to use damaged parts. Contact the machine manufacturer.
4. Check the parameterization of the drive system. Observe the instructions in the controller documentation.

9.8 Environmental Protection and Disposal

9.8.1 Environmental Protection

Production Processes The products are made with energy- and resource-optimized production processes which allow re-using and recycling the resulting waste. We regularly try to replace pollutant-loaded raw materials and supplies by more environment-friendly alternatives.

No Release of Hazardous Substances Our products do not contain any hazardous substances which may be released in the case of appropriate use. Normally, our products will not have any negativ influences on the environment.

Significant Components Basically, our products contain the following components:

Electronic devices
- steel
- aluminum
- copper
- synthetic materials
- electronic components and modules

Motors
- steel
- aluminum
- copper
- brass
- magnetic materials
- electronic components and modules

9.8.2 Disposal

Return of Products Our products can be returned to our premises free of charge for disposal. It is a precondition, however, that the products are free of oil, grease or other dirt.

Furthermore, the products returned for disposal must not contain any undue foreign material or foreign components.

Send the products ”free domicile” to the following address:

Bosch Rexroth AG
Electric Drives and Controls
Buergermeister-Dr.-Nebel-Strasse 2
97816 Lohr am Main, Germany

Packaging The packaging materials consist of cardboard, wood and polystyrene. These materials can be recycled anywhere without any problem.

For ecological reasons, please refrain from returning the empty packages to us.

Batteries and Accumulators Batteries and accumulators can be labeled with this symbol.

The symbol indicating "separate collection" for all batteries and accumulators is the crossed-out wheeled bin.

The end user within the EU is legally obligated to return used batteries. Outside the validity of the EU Directive 2006/66/EC keep the stipulated directives.

Used batteries can contain hazardous substances, which can harm the environment or the people´s health when they are improper stored or disposed of.

After use, the batteries or accumulators contained in Rexroth products have to be properly disposed of according to the country-specific collection.

Recycling

Most of the products can be recycled due to their high content of metal. In order to recycle the metal in the best possible way, the products must be disassembled into individual modules.

Metals contained in electric and electronic modules can also be recycled by means of special separation processes.

Products made of plastics can contain flame retardants. These plastic parts are labeled according to EN ISO 1043. They have to be recycled separately or disposed of according to the valid legal requirements.

10 Service and Support

Our worldwide service network provides an optimized and efficient support. Our experts offer you advice and assistance should you have any queries. You can contact us **24/7**.

Service Germany

Our technology-oriented Competence Center in Lohr, Germany, is responsible for all your service-related queries for electric drive and controls.

Contact the **Service Helpdesk & Hotline** under:

Phone:	**+49 9352 40 5060**
Fax:	**+49 9352 18 4941**
E-mail:	service.svc@boschrexroth.de
Internet:	http://www.boschrexroth.com

Additional information on service, repair (e.g. delivery addresses) and training can be found on our internet sites.

Service worldwide

Outside Germany, please contact your local service office first. For hotline numbers, refer to the sales office addresses on the internet.

Preparing information

To be able to help you more quickly and efficiently, please have the following information ready:

- Detailed description of malfunction and circumstances resulting in the malfunction
- Type plate name of the affected products, in particular type codes and serial numbers
- Your contact data (phone and fax number as well as your email address)

11 Appendix

11.1 Declaration of Conformity

Rexroth
Bosch Group

EG-Konformitätserklärung - *Original*

Dok.-Nr.: DCTC-30332-001
Datum: 2014-04-20

- ☐ nach Maschinenrichtlinie 2006/42/EG
- ☒ nach Niederspannungsrichtlinie 2006/95/EG
- ☐ nach EMV-Richtlinie 2004/108/EG
- ☐ nach Druckgeräte-Richtlinie 97/23/EG
- ☐ nach ATEX-Richtlinie 94/9/EG
- ☒ nach ErP-Richtlinie 2009/125/EG (Verordnung 640/2009/EG)

Hiermit erklärt der Hersteller,
Bosch Rexroth AG
Bürgermeister-Dr.-Nebel-Straße 2
97816 Lohr am Main / Germany,

dass die nachstehenden Produkte

Bezeichnung: AC-Motor
Typ: MOT-FC-ET2-...-HOY,
MOT-FC-EV2-...-HOY

Ab Herstelldatum: 2014-04-20

in Übereinstimmung mit den oben genannten EU-Richtlinien entwickelt, konstruiert und gefertigt wurden.

Angewandte harmonisierte Normen:

Norm	Titel	Ausgabe
EN 60034-1 *(IEC 60034-1)*	Drehende elektrische Maschinen – Teil 1: Bemessung und Betriebsverhalten	2010 + Cor.:2010 *(2010, modifiziert)*
EN 60034-5 (IEC 60034-5	Drehende elektrische Maschinen – Teil 5: Schutzarten aufgrund der Gesamtkonstruktion von drehenden elektrischen Maschinen (IP-Code) –Einteilung	2001 + A1:2007 *(2000 + Corrigendum 2001 + A1:2006)*
EN 60034-2-1 *(IEC 60034-2-1)*	Drehende elektrische Maschinen – Teil 2-1: Standardverfahren zur Bestimmung der Verluste und des Wirkungsgrades aus Prüfungen (ausgenommen Maschinen für Schienen und Straßenfahrzeuge)	2007 *(2007)*

Weitere Erläuterungen: Keine.

Lohr am Main, den 2014-04-20
Ort Datum

i.V. Manfred Schäfer
Leitung Vertriebliches Produktmanagement

i.V. Eberhard Schemm
Entwicklungsbereichsleiter Antriebe

Änderungen im Inhalt der EG-Konformitätserklärung sind vorbehalten. Derzeit gültige Ausgabe auf Anfrage.

DCTC-30332-001_KOE_N_DE_2014-04-20.docx

Appendix

Rexroth
Bosch Group

EC declaration of conformity

(Translation of the original Declaration of Conformity)

Doc. No.: DCTC-30332-001
Date: 2014-04-20

- ☐ in accordance with Machinery Directive 2006/42/EC
- ☒ in accordance with Low Voltage Directive 2006/95/EC
- ☐ in accordance with EMC Directive 2004/108/EC
- ☐ in accordance with Pressure Equipment Directive 97/23/EC
- ☐ in accordance with ATEX Directive 94/9/EC
- ☒ in accordance with ErP Directive 2009/125/EC (Commission Regulation 640/2009/EC)

The manufacturer,
Bosch Rexroth AG
Bürgermeister-Dr.-Nebel-Straße 2
97816 Lohr am Main / Germany

hereby declares that the products below

Name: AC motor
Type: MOT-FC-ET2-...-HOY,
MOT-FC-EV2-...-HOY

From the date of manufacture: 2014-04-20

were developed, designed and manufactured in compliance with the above-mentioned EU directives.

Harmonized Standards applied:

Standard	Title	Edition
EN 60034-1 *(IEC 60034-1)*	Rotating electrical machines – Part 1: Rating and performance	2010 + Cor.:2010 *(2010, modified)*
EN 60034-5 *(IEC 60034-5)*	Rotating electrical machines – Part 5: Degrees of protection provided by integral design of rotating electrical machines (IP code) - Classification	2001 + A1:2007 *(2000 + Corrigendum 2001 + A1:2006)*
EN 60034-2-1 *(IEC 60034-2-1)*	Rotating electrical machines – Part 2-1: Standard methods for determining losses and efficiency from tests (excluding machines for traction vehicles)	2007 *(2007)*

Further explanations: None.

PLACE / DATE / SIGNATURE as indicated in the original declaration.

DCTC-30332-001_KOE_N_EN_2014-04-20.docx

We reserve the right to make changes to the content of the EC Declaration of Conformity. Current issue on request.

Page 1 / 1

Fig. 11-2: CE declaration of conformity (translation)

Index

Index

Notes

Rexroth
Bosch Group

Bosch Rexroth AG
Electric Drives and Controls
P.O. Box 13 57
97803 Lohr, Germany
Bgm.-Dr.-Nebel-Str. 2
97816 Lohr, Germany
Tel. +49 9352 18 0
Fax +49 9352 18 8400
www.boschrexroth.com/electrics

R911343624

DOK-MOTOR*-MOT-FC*****-PR02-EN-P